HP Designjet Entry-Level Printers Service Manual

Version: September 2010

For HP Internal Use Only

©Copyright Hewlett-Packard Company 2010

This document contains proprietary information that is protected by copyright. All rights are reserved. No part of this document may be photocopied, reproduced, or translated to another language without the prior written consent of Hewlett-Packard Company.

Edition, September 2010.

Notices

Warranty

The information contained in this document is subject to change without notice.

Hewlett-Packard makes no warranty of any kind with regard to this material, including, but not limited to, the implied warranties of merchantability and fitness for a particular purpose.

Hewlett-Packard shall not be liable for errors contained herein or for incidental or consequential damages in connection with the furnishing, performance, or use of this material.

WARNING

The procedures described in this manual are to be performed by HP-qualified service personnel only.

Electrical Shock Hazard

Serious shock hazard leading to death or injury may result if you do not take the following precautions:

- Ensure that the ac power outlet (mains) has a protective earth (ground) terminal.
- Disconnect the Printer from the power source prior to performing any maintenance.
- Prevent water or any other liquids from running onto electrical components or circuits, or through openings in the enclosure.

Electrostatic Discharge

Refer to the beginning of Chapter 4 Utilities on page 53 of this manual, for precautions you should take to prevent damage to the Printer circuits from electrostatic discharge.

Safety Symbols

General definitions of safety symbols are given immediately after the table of contents.

WARNING

The Warning symbol calls attention to a procedure, practice, or the like, which, if not correctly performed or adhered to, could result in personal injury. Do not proceed beyond a Warning symbol until the indicated conditions are fully understood and met.

CAUTION

The Caution symbol calls attention to an operating procedure, practice, or the like, which, if not correctly performed or adhered to, could result in damage to or destruction of part or all of the product. Do not proceed beyond a Caution symbol until the indicated conditions are fully understood and met.

Content Management Department,

Barcelona Division,

Hewlett-Packard Espanola, S.A.

Avda. Graells, 501

08190 Sant Cugat del Valles

Spain

Using this Manual

Purpose

This Service Manual contains information necessary to test, calibrate and service:

- HP Designjet 30 Printer (Model C7790D)
- HP Designjet 30n Printer (Model C7790E)
- HP Designjet 70 Printer (Model Q6655A)
- HP Designjet 90 Printer (Model Q6656A)
- HP Designjet 90r Printer (Model Q6656B)
- HP Designjet 100+ Printer (Model C7796C)
- HP Designjet 110+ Printer (Model C7796D)
- HP Designjet 110+nr Printer (Model C7796E)
- HP Designjet 130 Printer (Model C7791C)
- HP Designjet 130nr Printer (Model C7791D)
- HP Designjet 110+r Printer (Model C7796H)
- HP Designjet 130r Printer (Model C7791H)
- HP Designjet 111 Printer with Roll (Model CQ532A)
- HP Designjet 111 Printer with tray (Model CQ533A)

For information about using these printers, refer to the corresponding User and Quick Reference Guides.

Readership

The procedures described in this Service Manual are to be performed by HP Certified service personnel only.

Part Numbers

Part Numbers for Printer options, accessories and service parts are located in Chapter 7 ⇒ Removal and Installation on page 95.

Conventions

A small arrow ⇒ is used to indicate other parts of the Service Manual where you can find information related to the topic you are consulting.

Table of contents

1 Test Prints

Usage Report Page 2
Information Page 3
NVM Contents Page 5

2 System Error Codes

Introduction 8
Errors and Warnings 9
System Error Codes 10
Warnings 17
Startup track mode 25
Emergency Firmware Upgrade 33
System Error Codes - Explanation 34

3 System Maintenance Utility

Introduction 38
Launching the System Maintenance Utility 38
System Maintenance Utility (Designjet 30, 30n, 70, 90, 90r, 110plus, 111, 130, 130nr) 40
Main Menu - Printer Front Panel Replication 40
Color Calibration 40
Align Printheads 45
Clean Printheads 46
Check Image Quality 47
Calibrate Paper Feed 48
Get Printer Information 50
Update Firmware 51
Reset Jetdirect Network Card 52

4 Utilities

Utilities 53
How to Access Restricted Access Utilities 54
Enable/Disable Buzzer 54
Transport Position 54
Printhead Recovery 55
Network Card Reset 56
Set to Factory Defaults 56
Hard EEPROM reset 57

Set Flag to Prime Tubes 57

5 Calibrations

PRS Adjustment 60
When Required 60
Manual PRS Adjustment 60
Factory Accuracy Calibration 70
Parts replacement and associated calibrations 72

6 Parts and Diagrams

Cover Assemblies 75
Cover Assemblies 76
Printer Labels 78
Right Hand Assemblies 79
Left Hand Assemblies 81
Scan-Axis Assemblies 82
Top Paper Path Assemblies (1 of 2) 84
Top Paper Path Assemblies (2 of 2) 85
Rear Paper Path Assemblies 87
Paper Feed Assemblies 88
Cable Harnesses 90
Ink Supplies and Accessories (1 of 2) 91
Ink Supplies & Accessories (2 of 2) 92
Rollfeed Components 93
Printer Stand and Basket 94

7 Removal and Installation

Introduction 96
Top Cover 98
Front Cover (Applicability: 30, 30n, 50ps) 98
Center Cover 99
Right End Cover 101
Left End Cover 103
Ink Supply Station Cover (Applicability: 70, 100, 100plus, 110plus, 111) 105
Ink Supply Station 106
Electronics Module 109
Power Supply Unit 112
Service Station 114
Front Panel 117
Encoder Strip 118
Carriage Motor 119
Cleanout Assembly 120
Ink Supply Tubes 121
Carriage Assembly (Applicability: 70, 100+, 110+, 111) 123
Carriage Assembly (Applicability: 30, 30nr, 90, 90r, 130, 130nr) 125
Carriage Belt 128

Starwheel Assembly (Applicability: 30, 30n) 129
Starwheel Assembly 130
Print Platen Assembly 131
Output Separator (Applicability: 30, 30n) 133
Ramp Motor Assembly 134
Output Mechanism Assembly (Applicability: 30, 30n) 135
Spittoon (If Installed in the Printer) 137
Pivot Assembly 138
Feed Roller Assembly (Applicability: 30, 30n) 139
Feed Roller Assembly 141
Pick Assembly (Applicability: 30, 30n) 145
Pick Assembly 146
Pinch Assembly (Applicability: 30, 30n) 152
Lower Paper Guide (Applicability: 30, 30n) 153
Inner Paper Guide (Applicability: 30, 30n) 154
Inner Paper Guide 155
OOPS Sensor 156
Paper-Axis Motor Drive Assembly (Applicable only to 30, 30n) 158
Paper-Axis Motor Assembly (Applicability: 90, 90r, 130, 130nr) 159
Bypass Platen (Applicability: 90, 90r, 130, 130nr) 160
Bypass Platen Actuator (Applicability: 90, 90r, 130, 130nr) 163
Output Platen (HP Designjet 111 with Roll) 165

8 Maintenance

Maintenance 168
Cleaning Information 168
Lubrication Information 170
About this Edition 170
What’s in this Service Manual 170

1 Test Prints

- Usage Report Page
- Information Page
- NVM Contents Page

Usage Report Page

The Usage Report Page contains the following information:

- Printer Model Name.
- Printer Model Number.
- Printer Serial Number.
- Date of last print job received.
- Total ink consumed.
- Date of first print job received.
- Number of pages printer (media size/media type/print quality setting).

To print the Usage Report Page, hold the power button down and press the resume button **once**.

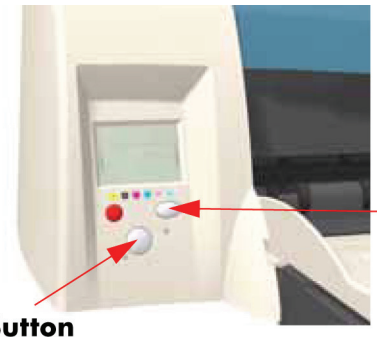

Sample of the Usage Report Page

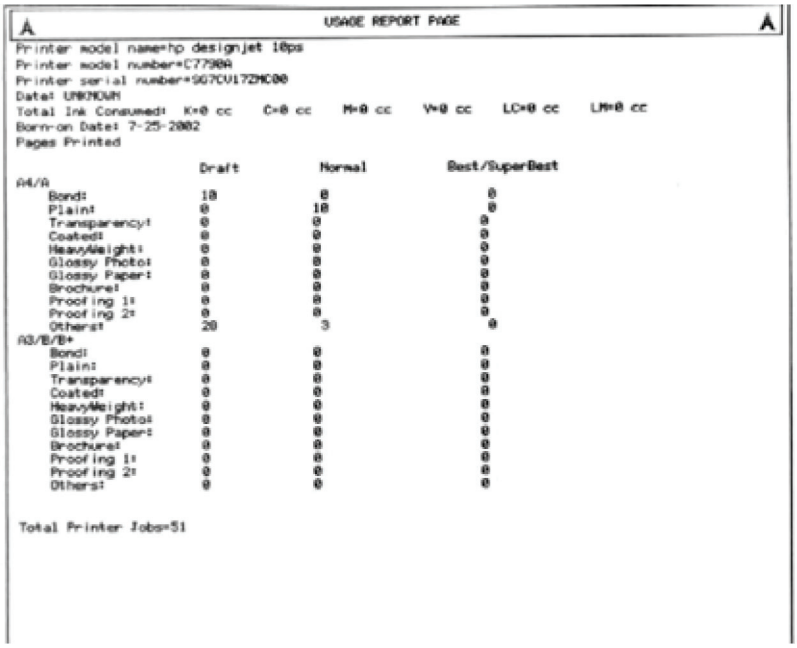

USAGE REPORT PAGE

Printer model name=hp designjet 10ps
Printer model number=C7790A
Printer serial number=SG7CV172MC00
Date: UNKNOWN
Total Ink Consumed: K=0 cc C=0 cc M=0 cc Y=0 cc LC=0 cc LM=0 cc
Born-on Date: 7-25-2002
Pages Printed

	Draft	Normal	Best/SuperBest
A4/A			
Bond:	10	0	0
Plain:	0	10	0
Transparency:	0	0	0
Coated:	0	0	0
HeavyWeight:	0	0	0
Glossy Photo:	0	0	0
Glossy Paper:	0	0	0
Brochure:	0	0	0
Proofing 1:	0	0	0
Proofing 2:	0	0	0
Others:	20	3	0
A3/B/B+			
Bond:	0	0	0
Plain:	0	0	0
Transparency:	0	0	0
Coated:	0	0	0
HeavyWeight:	0	0	0
Glossy Photo:	0	0	0
Glossy Paper:	0	0	0
Brochure:	0	0	0
Proofing 1:	0	0	0
Proofing 2:	0	0	0
Others:	0	0	0

Total Printer Jobs=51

Information Page

The Information Page contains the following information:

- Printer Identification.
- Printer Status.
- Printer Usage.
- Ink Consumable Identification.
- Ink Consumable Status.
- Ink Consumable Usage.
- Network Card Information.

To print the Information Page, hold the power button down and press the resume button **four times**.

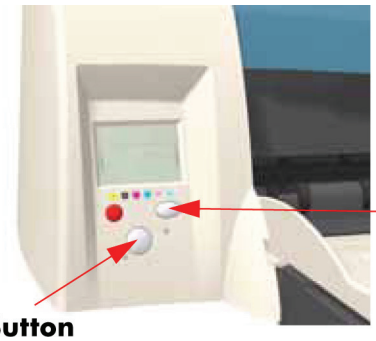

Sample of the Information Page (page 1 of 3)

```
                    I/O Section
HP JetDirect Configuration
Status:                      I/O Card Ready

Model Number:                        J4169A
Hardware Address:              0001E628DC30
Firmware Version:                    L.20.24
Port Select:                            RJ45

Network Statistics
Total Packets Received:                 6307
Unicast Packets Received:               305
Bad Packets Received:                     0
Framing Errors Received:                  0

Protocol Information
--------------- TCP/IP ----------------
Status:                               Ready

Host Name:                          eiffel043
IP Address:                      15.100.10.86
Subnet Mask:                    255.255.240.0
Default Gateway:                   15.100.0.1
Config By:                              BOOTP
BOOTP Server:                    15.100.4.222
TFTP Server:                     Not Specified
Config File:                     Not Specified

Domain Name:                     Not Specified
DNS Server:                      Not Specified
WINS Server:                     Not Specified
Syslog Server:                   Not Specified
Idle Timeout:                          270 sec
SLP:                                   Enabled
Access List:                     Not Specified
Web JetAdmin URL:                Not Specified

--------------- IPX/SPX ----------------

Status:                               Ready

Primary Frame Type:                Auto Select

Network   Frame Type                    Rcvd
Unknown   ENL II                          21
00000001  ENL 802.2                     1249
```

```
Port Config:                     10BASE-T HALF
Auto Negotiation:                           On
Manufacturing ID:               4044404402007
Date Manufactured:                     11/2000
SNMP Set Cmty Name:              Not Specified

Total Packets Transmitted:                 381
Unsendable Packets:                          0
Transmit Collisions:                        32
Transmit Late Collisions:                    0

----------- Novell/NetWare -------------

Status:                                     16
  NOT CONFIGURED
Node Name:                          NPI20DC30

Netware Mode:                     Queue Server
NDS Tree Name:

NDS Context:

Attached Server:

Queue Poll Interval:                     2 sec
SAP Interval:                           60 sec

-------------- AppleTalk ---------------

Status:                               Ready

Name:                     hp designjet 10ps4
Zone:                                 ICD-RED
Type 1:                             LaserWriter
Type 2:                              DeskWriter
Network Number:                           1500
Node Number:                               224

---------------- DLC/LLC ----------------

Status:                               Ready
```

Sample of the Information Page (page 2 of 3)

```
INFORMATION PAGE

Printer Identification Section
Printer model name=hp designjet 10ps
Printer model number=C7790A
Printer serial number=SG7CU172MC00
Firmware release=alfa
Service Id=12235
Type Eerom=Flash
Tray2 Present=No
Duplexer Present=No
Num I/O cards present=1

Printer Status Section
Date: UNKNOWN
Printer Status=OK
Printer Latest Errors:
#0 ErrorCode:7904 Filename:intheadsPhys.c Line:114 Date:5-17-2001 Page Count:151
#1 ErrorCode:7904 Filename:MechCommand.c Line:2001 Date:5-17-2001 Page Count:151
#2 ErrorCode:7904 Filename:intheadsPhys.c Line:114 Date:5-17-2001 Page Count:147
#3 ErrorCode:7904 Filename:MechCommand.c Line:2001 Date:5-17-2001 Page Count:147
#4 ErrorCode:7904 Filename:intheadsPhys.c Line:114 Date:5-17-2001 Page Count:146
#5 ErrorCode:7904 Filename:MechCommand.c Line:2001 Date:5-17-2001 Page Count:146
#6 ErrorCode:7904 Filename:ppn/RedHPPM.c Line:372 Date:UNKNOWN Page Count:100
#7 ErrorCode:7904 Filename:ventMonitor.c Line:192 Date:UNKNOWN Page Count:101
#8 ErrorCode:7904 Filename:redSP/RedSP.c Line:4422 Date:7-25-2002 Page Count:79
#9 ErrorCode:7904 Filename:ventMonitor.c Line:192 Date:UNKNOWN Page Count:56
Printer Latest Warnings:NOT IMPLEMENTED
Printhead Alignment=Yes
Latest Print jobs:
#0  "INFORMATION PAGE" PMode:plain_normal
#1  "INFOR PAGE 2" PMode:plain_normal
#2  "INFORMATION PAGE" PMode:plain_normal
#3  "todoblack.jpg" PMode:plain_best
#4  "todocyan.jpg" PMode:plain_best
#5  "USAGE REPORT" PMode:plain_normal
#6  "PAGENUM 6" PMode:plain_normal
#7  "PAGENUM 5" PMode:plain_normal
#8  "PAGENUM 4" PMode:plain_normal
#9  "PAGENUM 3" PMode:plain_normal

Printer Usage Section
Total Ink Consumed:  K=0 cc    C=0 cc    M=0 cc    V=0 cc    LC=0 cc    LM=0 cc
Printheads used by color:K=1   C=1   M=1   V=1   LC=1   LM=1
Total Page Count=107
Scan Axis Usage: 0%    Paper Axis Usage: 0%    Service Station Usage: 0%
Carriage Usage: 0%    Tube Usage: 0%
```

Sample of the Information Page (page 3 of 3)

```
Ink Consumable Identification Section
Printhead Information
Model Name:  K=HP No. 84 C=HP No. 11 M=HP No. 11 V=HP No. 11 LC=HP No. 84 LM=HP No. 84
Serial Number: K=01-01-0543763    C=01-01-0533852    M=01-01-0732532
V=01-01-0534948    LC=01-01-0787223    LM=01-01-0787388
Out of Warranty Date: K=7-15-2002 C=7-15-2002 M=7-22-2002 V=7-15-2002 LC=7-1-2002 LM=7-1-2002

Cartridge Information
Model Name: K=HP No. 84 C=HP No. 11 M=HP No. 11 V=HP No. 82 LC=HP No. 84 LM=HP No. 84
Serial Number:  K=84-02-3432848    C=84-02-2815341    M=84-02-1252464
V=86-01-1374278    LC=84-02-2264597    LM=84-02-2337128
Expiration Date: K=UNKNOWN C=UNKNOWN M=UNKNOWN V=UNKNOWN LC=UNKNOWN LM=UNKNOWN

Ink Consumable Status Section
Printhead Status:    K=Inserted - 0000   C=Inserted - 0000   M=Inserted - 0000
  V=Inserted - 0000   LC=Inserted - 0000   LM=Inserted - 0000
Scan Axis Shutdown :  K=Yes   C=Yes   M=Yes   V=Yes   LC=Yes   LM=Yes
Cartridge Status :   K=Inserted - 0000   C=Inserted - 0000   M=Inserted - 0000
  V=Inserted - 0000   LC=Inserted - 0000   LM=Inserted - 0000

Ink Consumable Usage Section
Ink Consumed Printhead:  K: 11 cc (2 %)    C: 4 cc (2 %)    M: 3 cc (1 %)
V: 5 cc (2 %)    LC: 5 cc (2 %)    LM: 4 cc (2 %)
Usage Time Printhead:  K=0 days C=0 days M=0 days V=0 days LC=0 days LM=0 days
Ink Consumed Cartrige:  K: 19 cc (26 %)    C: 12 cc (41 %)    M: 12 cc (41 %)
V: 12 cc (16 %)    LC: 8 cc (11 %)    LM: 9 cc (12 %)
Printhead history:
K:    #1 - Inserted - 10 cc (1%) -   0 days - Max. Recovery Level 0
C:    #1 - Inserted - 4 cc (2%) -   0 days - Max. Recovery Level 0
M:    #1 - Inserted - 3 cc (1%) -   0 days - Max. Recovery Level 0
V:    #1 - Inserted - 4 cc (2%) -   0 days - Max. Recovery Level 0
LC:   #1 - Inserted - 5 cc (2%) -   0 days - Max. Recovery Level 0
LM:   #1 - Inserted - 4 cc (2%) -   0 days - Max. Recovery Level 0
```

NVM Contents Page

The NVM Contents Page contains the following information:

- EEROM values dump containing all the values stored in the EEROM (Calibration, etc.)
- Printheads Acumen dump
- Cartridges Acumen dump.

To print the NVM Contents Page, hold the power button down and press the cancel button once and the resume button **twice**.

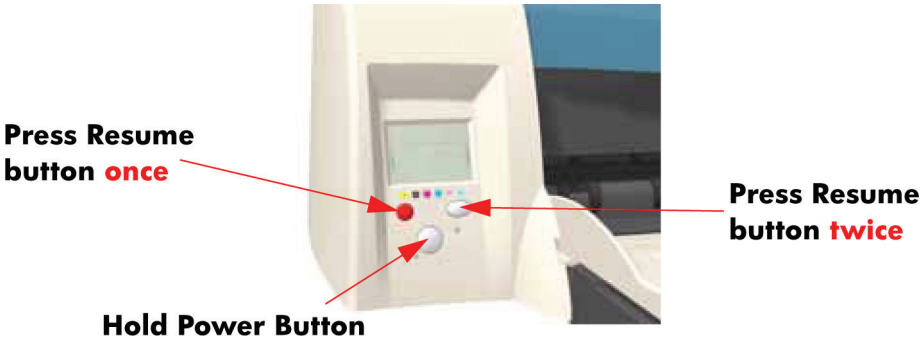

Sample of the NVM Contents Page (page 1 of 3)

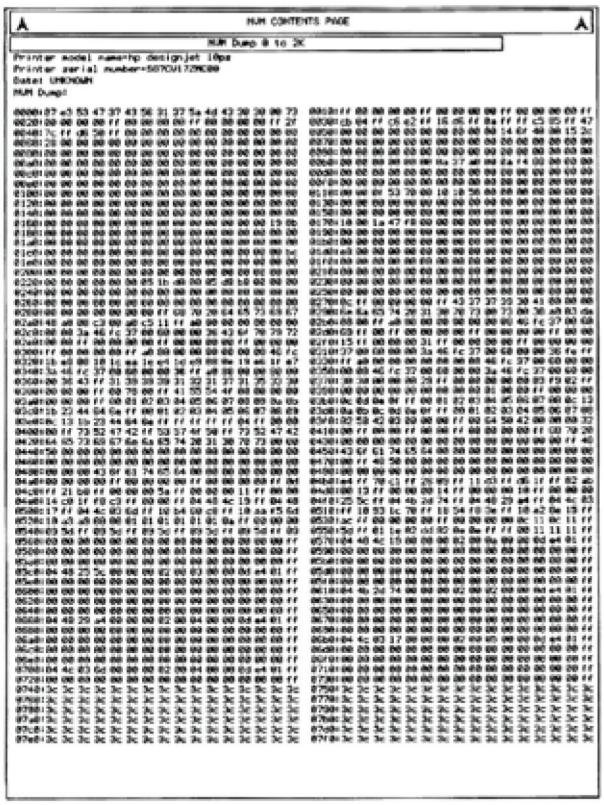

Sample of the NVM Contents Page (page 2 of 3)

Printheads Acumen Dump

```
Ph Acumen K:
00: 0c 10 42 34 2b 00 00 20 4e 00 00 00 00 00 00 00
10: 0b ff c3 2a 15 21 30 64 44 21 66 8f a5 19 29 7b
20: d4 73 7a 36 76 00 00 00 1d 00 09 b9 00 fe 27 00
30: 9d 00 00 00 00 00 6d 53 46 a1 30 40 7c 19 00 00
40: ca 00 c6 ff 00 00 00 00

Ph Acumen C:
00: 09 11 02 34 2b 00 00 20 4e 00 00 00 00 00 00 00
10: 0b ff c3 2a 15 20 95 70 44 21 66 81 e5 96 28 7b
20: d4 73 76 23 76 00 00 00 1d 00 09 b9 00 fe 27 00
30: 3b 00 00 00 00 00 6d 52 66 a1 30 40 7c 19 cf 38
40: ca 00 1b ff 00 00 00 00

Ph Acumen M:
00: 0a 12 02 34 2b 00 00 20 4e 00 00 00 00 00 00 00
10: 0b ff c4 2a 15 2c b5 d0 44 21 66 84 66 96 28 7b
20: d4 73 76 03 f6 00 00 00 1d 00 09 91 00 fe 27 00
30: 2d 00 00 00 00 00 6d 52 86 a1 30 40 7c 19 cf 38
40: ca 00 f6 ff 00 00 00 00

Ph Acumen Y:
00: 0b 13 02 34 2b 00 00 20 4e 00 00 00 00 00 00 00
10: 0b ff c3 2a 15 20 a6 90 44 21 66 7a a4 96 20 7b
20: d4 73 06 53 f6 00 00 00 1d 00 09 b9 00 fe 27 00
30: 40 00 00 00 00 00 6d 52 e6 a1 30 40 7c 19 cf 30
40: ca 00 32 ff 00 00 00 00

Ph Acumen LC:
00: 0d 11 22 34 2b 00 00 20 4e 00 00 00 00 00 00 00
10: 0b ff c1 2a 15 30 0c 5c 44 21 66 7f 65 56 28 7b
20: d4 73 79 c6 76 00 00 00 1d 00 09 b9 00 fe 27 00
30: 4d 00 00 00 00 00 6d 51 e6 a1 30 40 7c 19 00 00
40: ca 00 32 ff 00 00 00 00

Ph Acumen LM:
00: 0e 12 22 34 2b 00 00 20 4e 00 00 00 00 00 00 00
10: 0b ff c1 2a 15 30 0d b4 44 21 66 86 26 56 28 7b
20: d4 73 76 06 76 00 00 00 1d 00 09 b9 00 fe 27 00
30: 47 00 00 00 00 00 6d 52 66 a1 30 40 7c 19 00 00
40: ca 00 aa ff 00 00 00 00
```

Sample of the NVM Contents Page (page 3 of 3)

Cartridges Acumen Dump

```
Cart Acumen K:
00: 00 00 42 34 2c 00 03 00 00 00 00 00 4f aa 5d 33
10: 97 2a 65 cc 0b ff c4 20 15 d1 83 21 09 c1 33 12
20: 14 34 39 00 00 00 00 00 26 00 61 40 00 00 00 1f
30: ff cb 03 00 09 b9 a0 43 2a 41 00 00 00 00 00 00
40: 00 00 be ff 00 00 00 00

Cart Acumen C:
00: 0d 01 02 34 2c 00 07 00 00 00 00 00 4f aa 5d 33
10: 97 2a 65 cc 0b ff e8 20 15 ab d5 b5 00 81 33 07
20: 64 34 39 00 00 00 00 00 26 00 45 10 00 00 00 1f
30: ff c9 03 00 09 b9 a0 43 c8 1a 00 00 00 00 00 00
40: 00 00 3d ff 00 00 00 00

Cart Acumen M:
00: 0e 02 02 34 2c 00 07 00 00 00 00 00 4f aa 5d 33
10: 97 2a 65 cc 0b ff e9 20 15 4c 71 c1 00 01 33 07
20: 64 34 39 00 00 00 00 00 26 00 45 10 00 00 00 1f
30: ff cb 03 00 09 b9 a0 43 a2 f2 00 00 00 00 00 00
40: 00 00 ca ff 00 00 00 00

Cart Acumen Y:
00: 0f 03 02 34 2c 00 01 00 00 00 00 00 4f aa 5d 33
10: 97 2a 65 cc 0b ff e8 20 15 53 e0 f9 84 81 33 12
20: 14 34 39 00 00 00 00 00 26 00 61 20 00 00 00 1f
30: ff cb 03 00 09 b9 a0 43 04 e4 00 00 00 00 00 00
40: 00 00 41 ff 00 00 00 00

Cart Acumen LC:
00: 09 01 22 34 2c 00 00 00 00 00 00 00 4f aa 5d 33
10: 97 2a 65 cc 0b ff c4 20 15 0a 30 55 09 c1 33 12
20: 14 34 39 00 00 00 00 00 26 00 61 40 00 00 00 1f
30: ff cb 03 00 09 b9 a0 43 e7 67 00 00 00 00 00 00
40: 00 00 4a ff 00 00 00 00

Cart Acumen LM:
00: 0a 02 22 34 2c 00 00 00 00 00 00 00 4f aa 5d 33
10: 97 2a 65 cc 0b ff c4 20 15 0e a5 01 09 c1 33 12
20: 14 34 39 00 00 00 00 00 26 00 61 40 00 00 00 1f
30: ff cb 03 00 09 b9 a0 43 fe e3 00 00 00 00 00 00
40: 00 00 07 ff 00 00 00 00
```

2 System Error Codes

- Introduction
- Errors and Warnings
- System Error Codes
- Warnings
- Startup track mode
- Emergency Firmware Upgrade
- System Error Codes - Explanation

Introduction

The following pages contain a list of system error codes and their respective descriptions and recommended corrective actions. Only try one recommended action at a time and check if the error code has disappeared. Since the front panel can only display graphics, the error code needs to be determined by counting the bars on the front panel **(as shown below)**.

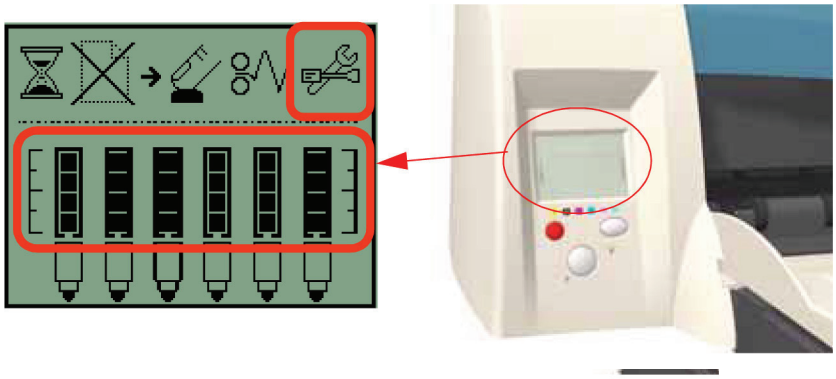

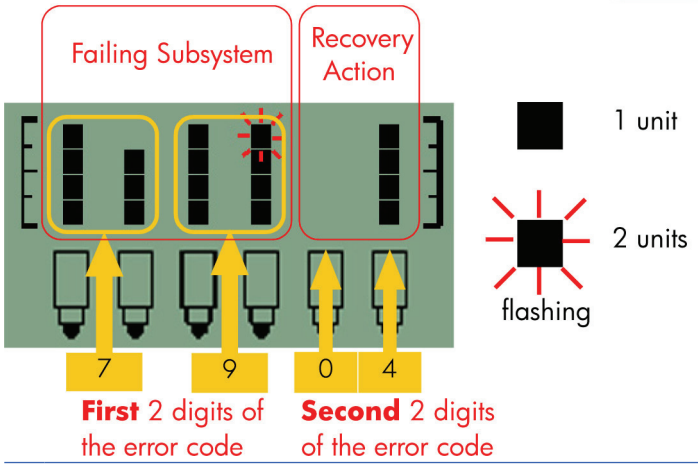

NOTE: Refer to System Error Codes - Explanation on page 34 for an explanation on the construction of the Error Codes and Warnings.

Errors and Warnings

Error Codes will normally be displayed directly on the front panel (but can also be seen on the Information Page) and will require some kind of intervention to resolve the problem. **Warnings** will **not** be displayed on the front panel, but will instead only appear on the Information Page, therefore allowing the user to continue operating the printer without the need of an intervention.

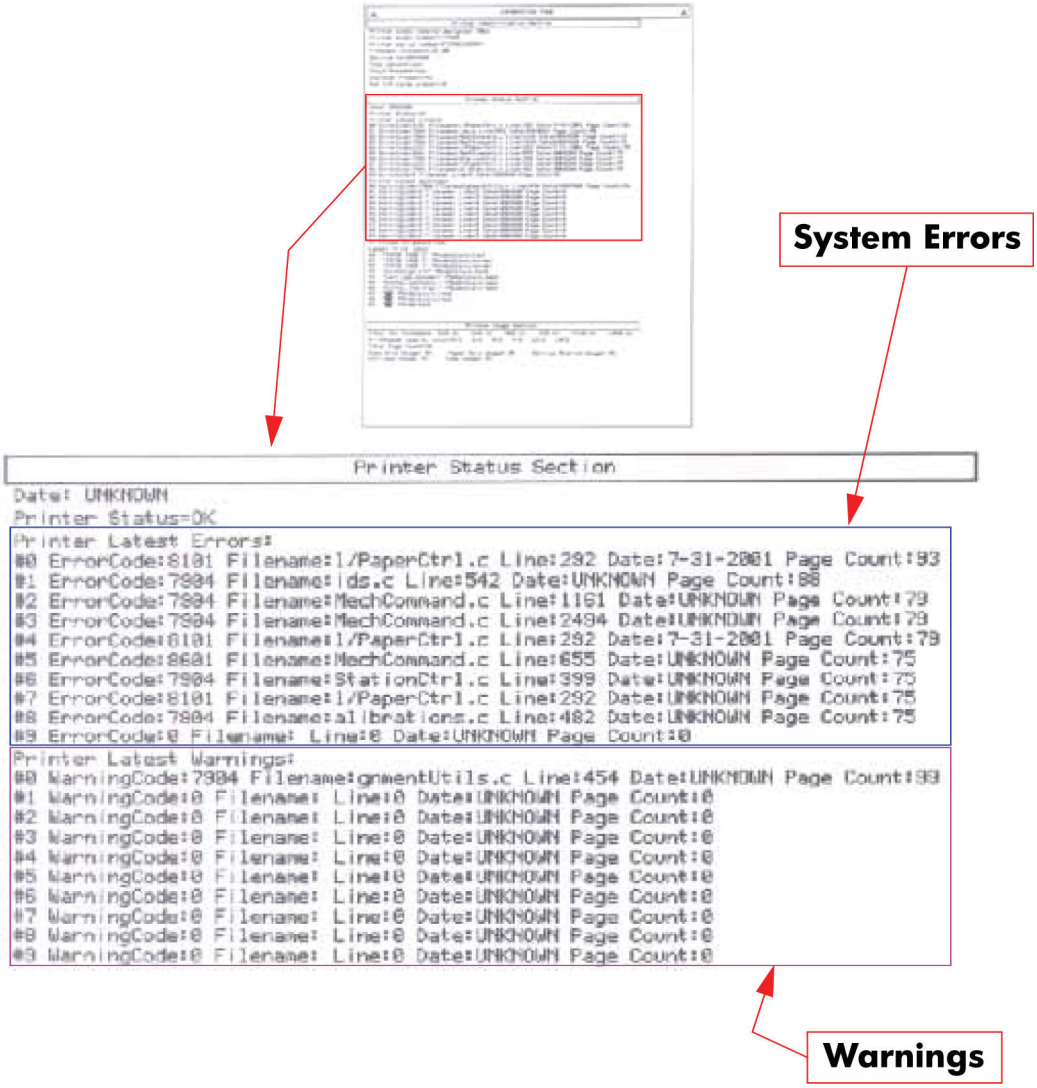

NOTE: You can also obtain report of the System Error and Warnings through the DesignJet System Maintenance Tool.

System Error Codes

NOTE: Applicable for 111 only: The printer has a MROM module and it is not possible to perform a firmware upgrade, and in fact not required as the printer already has the latest version.

01:10

Cause	Solution
Electronics Module failure.	Replace the Electronics Module Electronics Module on page 109.

01:12

Cause	Solution
Electronics Module failed during the firmware upgrade OR the Electronics Module failed during initialization.	Try the following: • If the Electronics Module failed during the firmware upgrade, first perform an emergency firmware upgrade (Emergency Firmware Upgrade on page 33). • If an emergency firmware upgrade is NOT possible or it didn't work, replace the Electronics Module Electronics Module on page 109.

02:10

Cause	Solution
Carriage failure.	Replace the Carriage Assembly Carriage Assembly (Applicability: 70, 100+, 110+, 111) on page 123.

04:13

Cause	Solution
Generic Firmware Error (Network Card).	Unplug the power cable from the printer and wait a few seconds. Plug in the power cable again and check if the Error Code has disappeared. If the error code continues, refer to the Jetdirect Card Service Manual and Service Notes.

08:11

Cause	Solution
Front Panel cannot be detected.	Try the following: • Check the connections and cables of the Font Panel, check they have not been damaged and are correctly connected, disconnect and reconnect the front panel. • Replace the Front Panel if the problem persists Front Panel on page 117.

11:10

Cause	Solution
Trailing Cable Failure.	Try the following: • Replace the Carriage Assembly ⇒ Carriage Assembly (Applicability: 70, 100+, 110+, 111) on page 123. • If the Error Code continues, replace the Electronics Module ⇒ Electronics Module on page 109. **NOTE:** Only replace one component at a time and check if the error has gone before replacing another component. Using this procedure you will be able to determine exactly which component failed.

11:11

Cause	Solution
Trailing Cable is badly connected.	Try the following: • Reconnect the Trailing Cable correctly to the Electronics Module. • If the Error Code continues, replace the Carriage Assembly ⇒ Carriage Assembly (Applicability: 70, 100+, 110+, 111) on page 123.

21:10

Cause	Solution
Service Station failure.	Replace the Service Station Assembly ⇒ Service Station on page 114.

22:10

Cause	Solution
Ink Supply Station failure.	Replace the Ink Supply Station ⇒ Ink Supply Station on page 106.

35:01

Cause	Solution
No Cleanout Assembly detected while loading media.	Try the following: • Remove the Cleanout Assembly and install it again correctly. • Replace the Cleanout Interconnect PCA. • If the Error Code continues, replace the Cleanout Assembly. **NOTE:** Only replace one component at a time and check if the error has gone before replacing another component. Using this procedure you will be able to determine exactly which component failed.

37:01

Cause	Solution
Automatic roll motor shutdown.	Try the following: • If this error code was caused by a paper jam, unplug the power cable from the printer and clear the blockage. Plug in the power cable again and check if the Error Code has disappeared. • If there is no paper jam or if recovering the paper jam does not resolve the problem, then replace the Automatic Roll System (the error could be caused by anything that stalls the motor).

37:10

Cause	Solution
Automatic roll home position error.	Replace the Automatic Roll System (the error could be caused by anything that causes the home position not to be detected or not to be the correct one - electrical sensors, internal mechanical problems, etc.).

42:10

Cause	Solution
Carriage Motor failure (short-circuit).	Replace the Carriage Motor Assembly Carriage Motor on page 119.

56:10

Cause	Solution
Error during the calibration of the motor encoder system or a problem finding the zero position on the Encoder Disc.	Try the following: • Replace the Paper-Axis Motor Drive Assembly Paper-Axis Motor Drive Assembly (Applicable only to 30, 30n) on page 158. • Replace the Encoder Disc. **NOTE:** Make sure you recalibrate the Paper-Axis after replacing the Paper-Axis Motor Drive Assembly or the Encoder Disc. Only replace one component at a time and check if the error has gone before replacing another component. Using this procedure you will be able to determine exactly which component failed.

56:13

Cause	Solution
Error during the calibration of the Line-feed Motor/Encoder system.	Unplug the power cable from the printer and wait a few seconds. Plug in the power cable again.

61:05

Cause	Solution
Firmware Upgrade or Color Calibration was rejected because the file was sent in the wrong format.	Upgrade the RIP software or the Designjet System Maintenance Tool.

62:04, 63:04, 64:04 and 65:04

Cause	Solution
I/O module error (62 = parallel; 63 = Network; 64 = USB).	Try the following: • Unplug the power cable from the printer and wait a few seconds. Plug in the power cable again and check if the Error Code has disappeared. • If the Error Code reappears, upgrade the firmware.

71:03

Cause	Solution
Generic Firmware Error (Out of memory).	Try the following: • Unplug the power cable from the printer and wait a few seconds. Plug in the power cable again and check if the Error Code has disappeared. • If the Error Code reappears, check for a new Firmware release.

71:14

Cause	Solution
Memory Management Error (Out of memory during firmware upgrade).	Try the following: • Unplug the power cable from the printer and wait a few seconds. Plug in the power cable again and check if the Error Code has disappeared. • If the Error Code reappears, perform an emergency firmware upgrade (Emergency Firmware Upgrade on page 33).

72:04

Cause	Solution
Generic Firmware Error (**expected**).	Try the following: • Unplug the power cable from the printer and wait a few seconds. Plug in the power cable again and check if the Error Code has disappeared. • If the Error Code reappears, check for a new Firmware release. • If possible, request the user to provide the following information which can be found on the **information page**: ◦ Firmware Release. ◦ Filename. ◦ Line.

74:12

Cause	Solution
Firmware Upgrade Error (Memory size check failed during firmware upgrade).	Try the following: • Perform the automatic troubleshooting procedure (requires a special firmware upgrade file that must be provided by the manufacturing division).

74:14

Cause	Solution
The printer is unavailable to upgrade the firmware..	Try the following: • Turn off and on the printer. • Print the Service Page • Check that the firmware is the latest available.: ◦ **Applicable for 110+,110+r,130,130r:** If the firmware version is D.05.04, this would indicate that the printer has a MROM module and it is not possible to perform a firmware upgrade, and in fact not required as the printer already has the latest version.

74:14

Cause	Solution
	◦ **Applicable for 111 only:** The printer has a MROM module and it is not possible to perform a firmware upgrade, and in fact not required as the printer already has the latest version.

79:04

Cause	Solution
Generic Firmware Error (**unexpected**).	Try the following: ● Unplug the power cable from the printer and wait a few seconds. Plug in the power cable again and check if the Error Code has disappeared. ● If the Error Code reappears, check for a new Firmware release. ● If possible, request the user to provide the following information which can be found on the **information page**: ◦ Firmware Release. ◦ Filename. ◦ Line.

81:01

Cause	Solution
Paper-Axis shutdown - usually a paper-jam caused by a blockage of the Paper-axis System.	Try the following: ● If this error code was caused by a paper-jam, unplug the power cable from the printer and clear the blockage. Plug in the power cable again and check if the Error Code has disappeared ● If this error code appeared but was NOT caused by a paper jam, replace the Paper-Axis Motor Drive Assembly Paper-Axis Motor Drive Assembly (Applicable only to 30, 30n) on page 158.

81:12

Cause	Solution
Media Advance error.	This error usually appears during the paper-advance calibration - Retry the paper-advance calibration.

83:10

Cause	Solution
Sheet feeding failure.	Try the following: • Replace the Out-Of-paper Sensor. • Replace the Electronics Module Electronics Module on page 109.

85:10

Cause	Solution
Paper-Axis Encoder error.	Try the following: • Make sure that the Encoder Sensor cable is connected correctly. • Replace the Paper-Axis Motor Drive Assembly Paper-Axis Motor Drive Assembly (Applicable only to 30, 30n) on page 158. • Replace the Electronics Module Electronics Module on page 109.

86:01

Cause	Solution
Scan-axis shutdown - usually a paper-jam caused by a blockage of the Scan-axis System.	Try the following: • Check that there are no obstacles in the Scan-Axis which stops the Carriage from moving freely. • Too much friction in the Slider Rod, try lubricating the Slider Rod. • The Carriage is bumping into the Service Station. If the Carriage is stuck at the right hand side of the Printer and cannot be moved out to the center of the Print Platen it is because the Service Station cannot uncap the printheads. In this case replace the Service Station Assembly Service Station on page 114. • Check that the belt is correctly installed and not damaged. • Check that the Turnaround Pulley is correctly installed. • Replace the Carriage Motor Assembly Carriage Motor on page 119.

86:11

Cause	Solution
Scan-axis shutdown during initialization. Typically, this error occurs when the printer detects an incorrect length.	Try the following: • Unplug the power cable from the printer and wait a few seconds. Plug in the power cable again and check if the Error Code has disappeared. • Check that the Paper-Axis Drive Motor Assembly is correctly installed and that the bushing is correctly locked into position. • Check that the Carriage moves freely and DOES NOT bump into the Service Station. • If the Printheads are not installed, maybe the carriage cover is not closed completely. • If the Error Code continues, replace the Carriage Assembly ⇒Carriage Assembly (Applicability: 70, 100+, 110+, 111) on page 123.

Warnings

01:11

Cause	Solution
The Electronics Module is incorrectly positioned.	Reseat the Electronics Module by Removing it from the Printer ⇒Electronics Module on page 109 and installing it again in the correct position.

01:12

Cause	Solution
Electronics Module Error.	The Electronics Module EEPROM is flagged as empty and must be upgraded with the contents of the Carriage EEPROM, but the Carriage is also flagged as empty. The backup is not performed. This is the result of an error during the manufacturing or the repair process. Therefore the Electronics Module must be reconfigured.

02:10

Cause	Solution
Carriage failure.	Replace the Carriage Assembly ⇒Carriage Assembly (Applicability: 70, 100+, 110+, 111) on page 123.

270:00

Cause	Solution
Black Color Calibration Failure - Black Color Calibration cancelled.	Try the following: • Clean the electrical contacts on the **black** printhead. • If the error code continues, replace the **black** printhead.

271:00

Cause	Solution
Cyan Color Calibration Failure - Cyan Color Calibration cancelled.	Try the following: • Clean the electrical contacts on the **cyan** printhead. • If the error code continues, replace the **cyan** printhead.

272:00

Cause	Solution
Magenta Color Calibration Failure - Magenta Color Calibration cancelled.	Try the following: • Clean the electrical contacts on the **magenta** printhead. • If the error code continues, replace the **magenta** printhead.

273:00

Cause	Solution
Yellow Color Calibration Failure - Yellow Color Calibration cancelled.	Try the following: • Clean the electrical contacts on the **yellow** printhead. • If the error code continues, replace the **yellow** printhead.

274:00 (Not applicable to HP DesignJet 70, 100, 100+, 110+)

Cause	Solution
Light Cyan Color Calibration Failure - Light Cayan Color Calibration cancelled.	Try the following: • Clean the electrical contacts on the **light cyan** printhead. • If the error code continues, replace the **light cyan** printhead.

275:00 (Not applicable to HP DesignJet 70, 100, 100+, 110+)

Cause	Solution
Light Magenta Color Calibration Failure - Light Magenta Color Calibration cancelled.	Try the following: • Clean the electrical contacts on the **light magenta** printhead. • If the error code continues, replace the **light magenta** printhead.

35:01

Cause	Solution
No Cleanout Assembly (or Duplexer, if installed) detected while loading media.	Try the following: • Remove the Cleanout Assembly (Cleanout Assembly on page 120) (or Duplexer, if installed) and install it again correctly. • Replace the Duplexer Interconnect PCA. • If the Error Code continues, replace the Cleanout Assembly Cleanout Assembly on page 120.

58:10

Cause	Solution
Problem detected in the color sensor system.	Replace the Carriage Assembly Carriage Assembly (Applicability: 70, 100+, 110+, 111) on page 123.

61:05

Cause	Solution
Language interpreting error. This is usually and error produced while parsing a file. There is probably an incompatibility between the driver and the firmware.	Upgrade the RIP software or the Designjet System Maintenance Tool.

65:01

Cause	Solution
Communication Failure.	Try the following: • Unplug the power cable from the printer and check the cable connections (Parallel, USB and Network cables). Plug in the power cable again and check if the Error Code has disappeared.

66:02:1 (Only applicable to HP DesignJet 30, 30n, 90, 90r, 130, 130nr)

Cause	Solution
Horizontal clipping. May happen when the roll ends in the middle of printing an image. Could also happen when multi-pick occurs and two sheets are loaded together and they do not completely overlap.	Make sure the image size is within the selected WIDTH of the sheet.

66:02:2 (Only applicable to HP DesignJet 30, 30n, 90, 90r, 130, 130nr)

Cause	Solution
Vertical clipping. May happen when the roll ends in the middle of printing an image. Could also happen when multi-pick occurs and two sheets are loaded together and they do not completely overlap.	Make sure the image size is within the selected LENGTH of the sheet.

71:14

Cause	Solution
Out-of-memory while trying to process the firmware upgrade file. Probably this is a firmware bug, because the firmware should free up enough memory to perform the firmware upgrade process correctly.	Perform an emergency firmware upgrade (Emergency Firmware Upgrade on page 33) .

74:12

Cause	Solution
Firmware bug in the firmware upgrade process	Try the following: • Download the special file in order to update the bootlog. • If possible, request the user to provide the following information which can be found on the **information page**: ◦ Firmware Release. ◦ Printer Serial Number.

74:14

Cause	Solution
The printer is unavailable to upgrade the firmware..	Try the following: • Turn off and on the printer. • Print the Service Page • Check that the firmware is the latest available.: ◦ **Applicable for 110+,110+r,130,130r:** If the firmware version is D.05.04, this would indicate that the printer has a MROM module and it is not possible

74:14

Cause	Solution
	to perform a firmware upgrade, and in fact not required as the printer already has the latest version. ◦ **Applicable for 111 only:** The printer has a MROM module and it is not possible to perform a firmware upgrade, and in fact not required as the printer already has the latest version.

81:01

Cause	Solution
Paper-Axis shutdown - usually a paper-jam caused by a blockage of the Paper-axis System.	Try the following: • If this error code was caused by a paper-jam, unplug the power cable from the printer and clear the blockage. Plug in the power cable again and check if the Error Code has disappeared. • If this error code appeared but was NOT caused by a paper jam, replace the Paper-Axis Motor Drive Assembly Paper-Axis Motor Drive Assembly (Applicable only to 30, 30n) on page 158.

83:01:1 (Only applicable to HP DesignJet 30, 30n, 70, 100+, 110+, 111, 90, 90r,, 130, 130nr)

Cause	Solution
The paper is rejected from the Bypass due to skew.	When manually loading paper from the front of the paper, make sure that it is loaded straight.

83:01:3 (Only applicable to HP DesignJet 70/100plus/110plus, 111 with Roll)

Cause	Solution
The paper is rejected from the roll due to skew.	When loading paper from the roll, make sure that it is loaded straight.

94:02:1 (Only applicable to HP DesignJet 30, 30n, 90, 90r, 130, 130nr, 111)

Cause	Solution
User selected Coated Paper and Best mode, but the Color Calibration profile was obsolete or missing for Coated Paper and the selected print quality setting.	Using the System Maintenance Tool, perform Color Calibration for Coated Paper and the selected print quality setting.

94:02:3 (Only applicable to HP DesignJet 30, 30n, 90, 90r, 130, 130nr, 111)

Cause	Solution
User selected Photo Paper and Best mode, but the Color Calibration profile was obsolete or missing for Photo Paper and the selected print quality setting.	Using the System Maintenance Tool, perform Color Calibration for Photo Paper and the selected print quality setting.

94:02:4 (Only applicable to HP DesignJet 30, 30n, 90, 90r, 130, 130nr)

Cause	Solution
User selected Heavy-Weight Coated Paper and Best mode, but the Color Calibration profile was obsolete or missing for Heavy-Weight Coated Paper and the selected print quality setting.	Using the System Maintenance Tool, perform Color Calibration for Heavy- Weight Coated Paper and the selected print quality setting.

94:02:5 (Only applicable to HP DesignJet 30, 30n, 90, 90r, 130, 130nr)

Cause	Solution
User selected Proofing Semi-Gloss Paper and Best mode, but the Color Calibration profile was obsolete or missing for Proofing Semi-Gloss Paper and the selected print quality setting	Using the System Maintenance Tool, perform Color Calibration for Proofing Semi-Gloss Paper and the selected print quality setting.

94:02:6 (Only applicable to HP DesignJet 30, 30n, 90, 90r, 130, 130nr)

Cause	Solution
User selected Photo Matte Paper and Best mode, but the Color Calibration profile was obsolete or missing for Photo Matte Paper and the selected print quality setting.	Using the System Maintenance Tool, perform Color Calibration for Photo Matte Paper and the selected print quality setting.

94:02:7 (Only applicable to HP DesignJet 30, 30n, 90, 90r, 130, 130nr)

Cause	Solution
User selected Photo Satin Paper and Best mode, but the Color Calibration profile was obsolete or missing for Photo Satin Paper and the selected print quality setting.	Using the System Maintenance Tool, perform Color Calibration for Photo Satin Paper and the selected print quality setting.

94:02:8 (Only applicable to HP DesignJet 30, 30n, 90, 90r, 130, 130nr)

Cause	Solution
User selected Coated Paper and Max dpi, but the Color Calibration profile was obsolete or missing for Coated Paper and the selected print quality setting.	Using the System Maintenance Tool, perform Color Calibration for Coated Paper and the selected print quality setting.

941:02:1 (Only applicable to HP DesignJet 30, 30n, 90, 90r, 130, 130nr)

Cause	Solution
User selected Photo Paper and Max dpi, but the Color Calibration profile was obsolete or missing for Photo Paper and the selected print quality setting.	Using the System Maintenance Tool, perform Color Calibration for Photo Paper and the selected print quality setting.

941:02:2 (Only applicable to HP DesignJet 30, 30n, 90, 90r, 130, 130nr)

Cause	Solution
User selected Heavy-Weight Coated Paper and Max dpi, but the Color Calibration profile was obsolete or missing for Heavy-Weight Coated Paper and the selected print quality setting.	Using the System Maintenance Tool, perform Color Calibration for Heavy- Weight Coated Paper and the selected print quality setting.

941:02:3 (Only applicable to HP DesignJet 30, 30n, 90, 90r, 130, 130nr)

Cause	Solution
User selected Proofing Semi-Gloss Paper and Max dpi mode, but the Color Calibration profile was obsolete or missing for Proofing Semi-Gloss Paper and the selected print quality setting.	Using the System Maintenance Tool, perform Color Calibration for Proofing Semi-Gloss Paper and the selected print quality setting.

941:02:4 (Only applicable to HP DesignJet 30, 30n, 90, 90r, 130, 130nr)

Cause	Solution
User selected Photo Matte Paper and Max dpi mode, but the Color Calibration profile was obsolete or missing for Photo Matte Paper and the selected print quality setting.	Using the System Maintenance Tool, perform Color Calibration for Photo Matte Paper and the selected print quality setting.

941:02:5 (Only applicable to HP DesignJet 30, 30n, 90, 90r, 130, 130nr)

Cause	Solution
User selected Photo Satin Paper and Max dpi mode, but the Color Calibration profile was obsolete or missing for Photo Satin Paper and the selected print quality setting.	Using the System Maintenance Tool, perform Color Calibration for Photo Satin Paper and the selected print quality setting.

94:04

Cause	Solution
Firmware Error (during color calibration).	Try the following: • Unplug the power cable from the printer and wait a few seconds. Plug in the power cable again and check if the Error Code has disappeared. • If the Error Code reappears, check for a new Firmware release.

94:08

Cause	Solution
Color Calibration Warning - Color Calibration not cancelled but Color Calibration values are likely to be incorrect.	Try the Color Calibration again, but this time using a different type of media (preferably **HP** media).

94:10

Cause	Solution
Color Calibration Failure - Color Calibration cancelled.	Try the following: • Unplug the power cable from the printer and wait a few seconds. Plug in the power cable again and try the Color Calibration again. • If this error code appears again, check the Color Calibration print: ◦ If the Color Calibration was printed correctly without any print defects, then check that the media is moving freely (backwards and forwards) while the printer is scanning it. ◦ If the Color Calibration was printed incorrectly, with some print defects, replace the faulty Printhead of the color where the defects were noticeable. ◦ If the Error Code continues, replace the Carriage Assembly Carriage Assembly (Applicability: 70, 100+, 110+, 111) on page 123.

95:00

Cause	Solution
Printhead Alignment Failure - Printhead Alignment cancelled.	Try the following: • Clean the printhead indicated by the printer. • If the error code continues, replace the faulty printhead.

95:02

Cause	Solution
Printhead Alignment Failure - Printhead Alignment cancelled.	Try the following: • Unplug the power cable from the printer and wait a few seconds. Plug in the power cable again and try the Printhead Alignment again. • If this error code appears again, check the Printhead Alignment print: ◦ If the Printhead Alignment was printed correctly without any print defects, then check that the media is moving freely (backwards and forwards) while the printer is scanning it. ◦ If the Printhead Alignment was printed incorrectly, with some print defects, replace the faulty Printhead of the color where the defects were noticeable.

95:04

Cause	Solution
Firmware Error (during Printhead Alignment).	Upgrade the printer to the latest firmware release.

Startup track mode

Introduction

The startup track mode is designed to enable you to identify a failing subsystems while the printer is initializing. Startup track mode provides a specific indication of which particular subsystem is failing. This mode is not intended for use by end-users.

Initializing the printer in Startup track mode

To initialize the printer in Startup track mode:

1. Hold the 'Continue' button while connecting the printer to the power supply.
2. During the initialization of the printer, the front panel will display a range of code numbers in the form of squares, these code numbers added together represent the various subsystems about to be initialized.
3. Once the printer comes to initializing the failing subsystem, the front panel will hang, and all that will be displayed is the failing subsystem.

Interpreting the numbered code system

While the printer is initializing, the front panel will display a sequence of squares in the last two columns. Each position in the last two columns represents a number, all the numbers represented are shown below. To find the failing subsystem, add the numbers together that have a square and refer to the list of numbers with their associated subsystems on Subsystem Code Description on page 25.

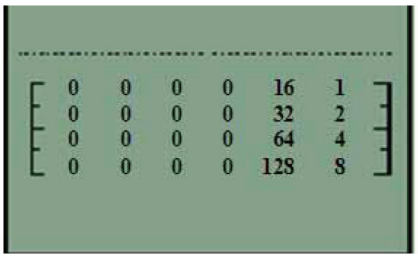

In the example below the printer is initializing and the front panel has stopped and is displaying squares in positions 16, 32, 64, and 4. Add these four values together and you get 116, refer to the list on Subsystem Code Description on page 25, and we can see the failing subsystem is the Trailing Cable.

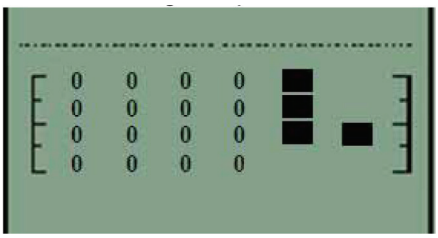

If the display reaches 191, you will need to turn On the printer from the power button. If all the subsystems pass the initialization, the printer will initialize normally and go to the ready status.

Subsystem Code Description

This is the list of the subsystems and their associated Startup Track Numbers. Many of the descriptions of the Subsystems will not be immediately obvious, when this is the case contact the lfp help desk and they can assist you.

Table 2-1 Subsystem code description

Startup track number: Associated Subsystem

Table 2-1 Subsystem code description (continued)

Startup Track 004: Calling EiffelMain
Startup Track 005: Initializing Classes
Startup Track 006: Initializing SM
Startup Track 007: Initializing Memory
Startup Track 008: Initializing MemoryVolatile
Startup Track 009: Initializing MemoryEndian
Startup Track 010: Initializing MemoryVolatileEndian
Startup Track 011: Initializing Impala
Startup Track 012: Initializing ColdFire
Startup Track 013: Initializing ImpalaInterruptController
Startup Track 014: Initializing MechProcTaskHiIntA
Startup Track 015: Initializing IsardInterruptA
Startup Track 016: Initializing Watchdog
Startup Track 017: Initializing Chronometer
Startup Track 018: Initializing EddTimer
Startup Track 019: Initializing IsardInterruptB
Startup Track 020: Initializing PciSlot2Interrupt
Startup Track 021: Initializing PciSlot3Interrupt
Startup Track 022: Initializing PciSlot4Interrupt
Startup Track 023: Initializing PciSlot5Interrupt
Startup Track 024: Initializing MagentaFireLow
Startup Track 025: Initializing BongoGpio
Startup Track 026: Initializing SecondTraySensor
Startup Track 027: Initializing CleanoutSensor
Startup Track 028: Initializing RearPathPaperSensor
Startup Track 029: Initializing BlackCartridgeSensor
Startup Track 030: Initializing CyanCartridgeSensor
Startup Track 031: Initializing MagentaCartridgeSensor
Startup Track 032: Initializing YellowCartridgeSensor
Startup Track 033: Initializing LightMagentaCartridgeSensor
Startup Track 034: Initializing LightCyanCartridgeSensor
Startup Track 035: Initializing SynergyReset
Startup Track 036: Initializing FrontPanelReset
Startup Track 037: Initializing PowerFan
Startup Track 038: Initializing FrontPanelInterrupt
Startup Track 039: Initializing CoverWindowSensor
Startup Track 040: Initializing nUSB_ENABLE
Startup Track 041: Initializing USB_CONNECT

Table 2-1 Subsystem code description (continued)

Startup Track 042: Initializing TrailingCable3Sensor
Startup Track 043: Initializing TrailingCable12Sensor
Startup Track 044: Initializing PrintheadSensor
Startup Track 045: Initializing BongoBrake
Startup Track 046: Initializing Dma
Startup Track 047: Initializing BongoEncoder
Startup Track 048: Initializing ServiceStationEncoder
Startup Track 049: Initializing SSPwm
Startup Track 050: Initializing PaperPwm
Startup Track 051: Initializing RampPwm
Startup Track 052: Initializing CarriagePwmForward
Startup Track 052: Initializing CarriagePwmForward
Startup Track 054: Initializing BomboPwm
Startup Track 055: Initializing EddPwm
Startup Track 056: Initializing ImpalaCarriagePosition
Startup Track 057: Initializing I2c0
Startup Track 058: Initializing I2c1
Startup Track 059: Initializing I2c2
Startup Track 060: Initializing I2c3
Startup Track 061: Initializing Darwin
Startup Track 062: Initializing PciCtrl
Startup Track 063: Initializing PciDma
Startup Track 064: Initializing MBandToPixel
Startup Track 065: Initializing PixelData
Startup Track 066: Initializing BlackCSData
Startup Track 067: Initializing CyanCSData
Startup Track 068: Initializing MagentaCSData
Startup Track 069: Initializing YellowCSData
Startup Track 070: Initializing LightCyanCSData
Startup Track 071: Initializing LightMagentaCSData
Startup Track 072: Initializing BlackPrintHead
Startup Track 073: Initializing CyanPrintHead
Startup Track 074: Initializing MagentaPrintHead
Startup Track 075: Initializing YellowPrintHead
Startup Track 076: Initializing LightCyanPrintHead
Startup Track 077: Initializing LightMagentaPrintHead
Startup Track 078: Initializing BlockBlack
Startup Track 079: Initializing BlockColor

Table 2-1 Subsystem code description (continued)

Startup Track 080: Initializing ContoneToRaster
Startup Track 081: Initializing Enhancer
Startup Track 082: Initializing RasterToMband
Startup Track 083: Initializing MechProcA
Startup Track 084: Initializing MemoryUncached
Startup Track 085: Initializing Isard
Startup Track 086: Initializing IsardInterruptController
Startup Track 087: Initializing PaperInterrupt
Startup Track 088: Initializing IsardPMTimer
Startup Track 089: Initializing IsardKFort
Startup Track 090: Initializing IsardCarriagePosition
Startup Track 091: Initializing IsardPaperPosition
Startup Track 092: Initializing MediaPosition
Startup Track 093: Initializing PaperEncoderPosition
Startup Track 094: Initializing IsardMotorShortcut
Startup Track 095: Initializing Eridani
Startup Track 096: Initializing EddOn
Startup Track 097: Initializing ServiceStationLed
Startup Track 098: Initializing FetRegulator
Startup Track 099: Initializing EddOut
Startup Track 100: Initializing DuplexerConversor
Startup Track 101: Initializing EridaniConversorAuto
Startup Track 102: Initializing EridaniConversorAB
Startup Track 103: Initializing EridaniConversorAnA
Startup Track 104: Initializing EridaniConversorBnB
Startup Track 105: Initializing PaperDriver
Startup Track 106: Initializing ServiceStationDriver
Startup Track 107: Initializing RampDriver
Startup Track 108: Initializing DuplexerSensor
Startup Track 109: Initializing PaperMotorHw
Startup Track 110: Initializing CarriageMotorHw
Startup Track 111: Initializing ServiceStationMotorHw
Startup Track 112: Initializing BongoEncoderWindowHw
Startup Track 113: Initializing BongoMotorHw
Startup Track 114: Initializing RampMotorHw
Startup Track 115: Initializing FrontPanelHw
Startup Track 116: Initializing TrailingCable
Startup Track 117: Initializing CarriageBoardHw

Table 2-1 Subsystem code description (continued)

Startup Track 118: Initializing SynergyA
Startup Track 119: Initializing VPPA
Startup Track 120: Initializing VPPB
Startup Track 121: Initializing SynergyInternalRegulatorA
Startup Track 122: Initializing Led1Voltage
Startup Track 123: Initializing EndeavourA
Startup Track 124: Initializing EndeavourAcumenA
Startup Track 125: Initializing CLC_Channel0
Startup Track 126: Initializing CLC_Channel1
Startup Track 127: Initializing CLC_Channel2
Startup Track 128: Initializing EndeavourVRefConversor
Startup Track 129: Initializing CLC_ChannelDACConversor
Startup Track 130: Initializing IS_Channel3Conversor_A
Startup Track 131: Initializing CLC_Channel0Conversor
Startup Track 132: Initializing CLC_Channel1Conversor
Startup Track 133: Initializing CLC_Channel2Conversor
Startup Track 134: Initializing Led2Voltage
Startup Track 135: Initializing Black5V
Startup Track 136: Initializing Yellow5V
Startup Track 137: Initializing Magenta5V
Startup Track 138: Initializing Cyan5V
Startup Track 139: Initializing Black12V
Startup Track 140: Initializing Yellow12V
Startup Track 141: Initializing Magenta12V
Startup Track 142: Initializing Cyan12V
Startup Track 143: Initializing VPen_Current_Sense_A
Startup Track 144: Initializing VPen_OV_Latch_A
Startup Track 145: Initializing VPen_OV_Clear_Latch_A
Startup Track 146: Initializing VPen_UV_Latch_A
Startup Track 147: Initializing VPen_UV_Clear_Latch_A
Startup Track 148: Initializing VPen_OV_Present_A
Startup Track 149: Initializing VPen_UV_Present_A
Startup Track 150: Initializing EndeavourB
Startup Track 151: Initializing EndeavourAcumenB
Startup Track 152: Initializing IS_Channel3Conversor_B
Startup Track 153: Initializing Led3Voltage
Startup Track 154: Initializing LightMagenta5V
Startup Track 155: Initializing LightCyan5V

Table 2-1 Subsystem code description (continued)

Startup Track 156: Initializing LightMagenta12V
Startup Track 157: Initializing LightCyan12V
Startup Track 158: Initializing VPen_Current_Sense_B
Startup Track 159: Initializing VPen_OV_Latch_B
Startup Track 160: Initializing VPen_OV_Clear_Latch_B
Startup Track 161: Initializing VPen_UV_Latch_B
Startup Track 162: Initializing VPen_UV_Clear_Latch_B
Startup Track 163: Initializing VPen_OV_Present_B
Startup Track 164: Initializing VPen_UV_Present_B
Startup Track 165: Initializing Eerom
Startup Track 166: Initializing EeromCarriage
Startup Track 167: Initializing PrintheadControl
Startup Track 168: Initializing BlackPrintheadAcumen
Startup Track 169: Initializing CyanPrintheadAcumen
Startup Track 170: Initializing MagentaPrintheadAcumen
Startup Track 171: Initializing YellowPrintheadAcumen
Startup Track 172: Initializing LightCyanPrintheadAcumen
Startup Track 173: Initializing LightMagentaPrintheadAcumen
Startup Track 174: Initializing BlackCartridgeAcumen
Startup Track 175: Initializing CyanCartridgeAcumen
Startup Track 176: Initializing MagentaCartridgeAcumen
Startup Track 177: Initializing YellowCartridgeAcumen
Startup Track 178: Initializing LightCyanCartridgeAcumen
Startup Track 179: Initializing LightMagentaCartridgeAcumen
Startup Track 180: Initializing ColorSensor
Startup Track 181: Initializing ColorSensorLed1
Startup Track 182: Initializing ColorSensorLed2
Startup Track 183: Initializing ColorSensorLed3
Startup Track 184: Initializing ColorSensorConverso
Startup Track 185: Initializing ColorSensorConversorB
Startup Track 186: Initializing ColorSensorConversorC
Startup Track 187: Initializing V5_V12_ISDetection
Startup Track 188: Initializing VPP_ISDetection
Startup Track 189: Initializing InterruptController
Startup Track 190: SM Initialized
Startup Track 191: Back from EiffelMain!!!
PRESS POWER BUTTON HERE!!
Startup Track 192: Initializing VPPA

Table 2-1 Subsystem code description (continued)

Startup Track 193: Initializing VPPB
Startup Track 194: Initializing SynergyInternalRegulatorA
Startup Track 195: Initializing Led1Voltage
Startup Track 196: Initializing EndeavourAcumenA
Startup Track 197: Initializing CLC_Channel0
Startup Track 198: Initializing CLC_Channel1
Startup Track 199: Initializing CLC_Channel2
Startup Track 200: Initializing EndeavourVRefConversor
Startup Track 201: Initializing CLC_ChannelDACConversor
Startup Track 202: Initializing IS_Channel3Conversor_A
Startup Track 203: Initializing CLC_Channel0Conversor
Startup Track 204: Initializing CLC_Channel1Conversor
Startup Track 205: Initializing CLC_Channel2Conversor
Startup Track 206: Initializing Led2Voltage
Startup Track 207: Initializing Black5V
Startup Track 208: Initializing Yellow5V
Startup Track 209: Initializing Magenta5V
Startup Track 210: Initializing Cyan5V
Startup Track 211: Initializing Black12V
Startup Track 212: Initializing Yellow12V
Startup Track 213: Initializing Magenta12V
Startup Track 214: Initializing Cyan12V
Startup Track 215: Initializing VPen_Current_Sense_A
Startup Track 216: Initializing VPen_OV_Latch_A
Startup Track 217: Initializing VPen_OV_Clear_Latch_A
Startup Track 218: Initializing VPen_UV_Latch_A
Startup Track 219: Initializing VPen_UV_Clear_Latch_A
Startup Track 220: Initializing VPen_OV_Present_A
Startup Track 221: Initializing VPen_UV_Present_A
Startup Track 222: Initializing EndeavourAcumenB
Startup Track 223: Initializing IS_Channel3Conversor_B
Startup Track 224: Initializing Led3Voltage
Startup Track 225: Initializing LightMagenta5V
Startup Track 226: Initializing LightCyan5V
Startup Track 227: Initializing LightMagenta12V
Startup Track 228: Initializing LightCyan12V
Startup Track 229: Initializing VPen_Current_Sense_B
Startup Track 230: Initializing VPen_OV_Latch_B

Table 2-1 Subsystem code description (continued)

Startup Track 231: Initializing VPen_OV_Clear_Latch_B
Startup Track 232: Initializing VPen_UV_Latch_B
Startup Track 233: Initializing VPen_UV_Clear_Latch_B
Startup Track 234: Initializing VPen_OV_Present_B
Startup Track 235: Initializing VPen_UV_Present_B

Emergency Firmware Upgrade

1. Unplug the power cord from the printer and wait a few seconds.
2. Press and hold the Cancel (red) button while plugging in the power cord.
3. The printer will initialize in emergency mode (the front panel will display just the arrow icon).
4. Connect the printer to the computer with a parallel cable.
5. Send the firmware file through the parallel port from the DOS command prompt. Type: `copy /b firmware_file lpt1`: and then press ENTER.

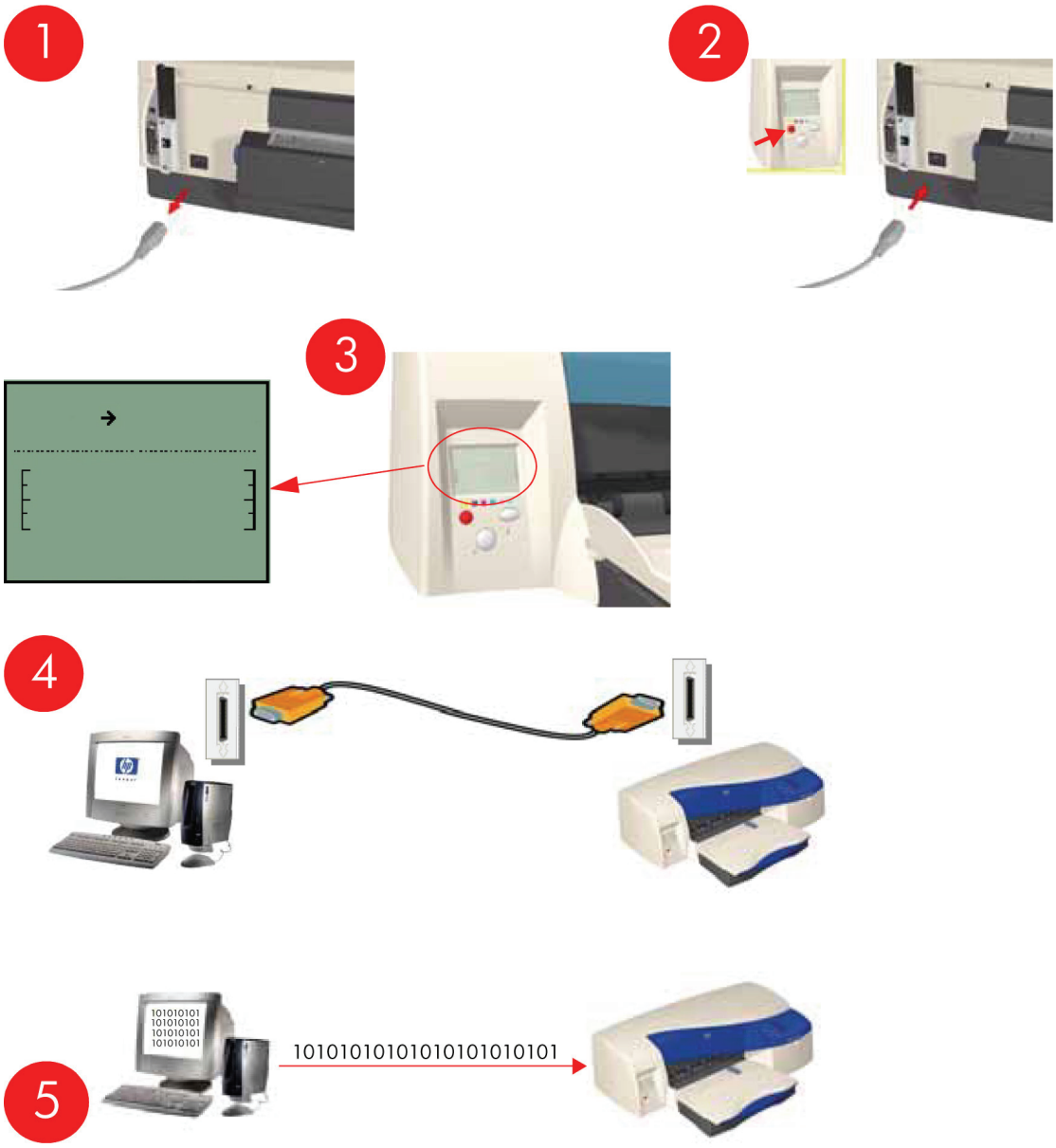

System Error Codes - Explanation

System Error Codes explain which component/system is failing and what action should be taken to resolve the problem.

System Error Codes are displayed directly on the front panel (but can also be seen on the Information Page) and have been defined in the format **XX.YZ**.

Warnings will **not** be displayed on the front panel, but will instead only appear on the Information Page and have been defined in the format **XXn.YZ.m**.

- **XX**: Service Part (2 digits).
- **n**: Service Part Index (if more than one used in the product) - Optional.
  - e.g. Identify the Ink Supply (color and number).
- **Y**: Who should perform the action (1 digit) - (User or Service Engineer).
- **Z**: Action to perform (1 digit).
- **m**: additional actions/information to consider (1 digit) - Optional.
  - e.g. Non-authorized ink was detected, PM was triggered or Printhead in/out of Warranty.

The following table explains the **XX** part of the System Error Code or Warning:

NOTE: Items denoting * (Asterisk) are not applicable to the printers.

Table 2-2 System error codes

Code	Component/System
01	Main PCA/Electronics Module
02	Carriage/Carriage PCA
03	Power Supply Unit
04	Network Card
05	Formatter *
06	Hard Disk Drive *
07	Interconnect PCA
08	Front Panel
11	Trailing Cable
12	Carriage Flex Circuit
17	Interconnect Cable
21	Service Station
22	Ink Supply Station
23	Pressure System (APS) *
24	Ink Delivery Tubes
25	Spittoon *
26n	Ink Cartridge (color n)
26n	Printhead (color n)
31	Cutter

Table 2-2 System error codes (continued)

32	Take-up Reel *
33	Sheet Feeder
34	Dryer/Blower *
35	Cleanout Assembly
36	Duplexer
37	ARSS/Rollfeed
38	Output Tray
41	Paper-Axis Motor
42	Scan-Axis Motor
43	Vacuum Fan *
44	Aerosol fan *
51	Window Sensor
52	Drop Detector *
53	Media Sensor
54	Pinch-Arm Sensor
55	Line Sensor
56	Drive Roller Encoder Sensor
57	Ink Leak Detector *
58	Color Sensor *
59	Media Type Sensor *
61	Language Interpreting
62	Input/Output through Parallel Port
63	Input/Output through Network Card
64	Input/Output through USB Port
65	Input/Output (not know what port)
66	Print Job Configuration
71	Print Job Configuration
72	Generic Firmware
73	Motor Control Functions
74	Motor Control Functions 74 Firmware Upgrade
79	Firmware Crash
81	Media Advance
82	Media Cut *
83	Single-Sheet Feeding
84	Roll Feeding *
85	Media-Axis Encoder Reading
86	Carriage Movement
87	Scan-Axis Encoder Reading

Table 2-2 System error codes (continued)

91	Printhead Firing
92	Servicing
93	Ink Pumping
94	Ink Pumping
95	Printhead Alignment
96	Image Quality Troubleshooting

The following table explains the **YZ** part of the System Error Code or Warning:

Table 2-3 System error codes

Code	Response	Response
00	Replace	Possible for customer to perform action
01	Reseat/Reconnect/Clean/Adjust (manually)	
02	Calibrate/Adjust (using Automatic Process)	
03	Power OFF	
04	Upgrade System Firmware	
05	Upgrade Driver	
06	Add Accessory	
07	Escalate	
08	Send Plot Again	
09	Wrong Part Installed	
10	Replace	HP qualified personnel assistance required
11	Reseat/Reconnect/Clean/Adjust (manually)	
12	Calibrate/Adjust (using Automatic Process)	
13	Power OFF	
14	Upgrade System Firmware	
15	Upgrade Driver	
16	Add Accessory	
17	Escalate	
18	Send Plot Again	
19	Wrong Part Installed	

3 System Maintenance Utility

- Introduction
- Launching the System Maintenance Utility
- System Maintenance Utility (Designjet 30, 30n, 70, 90, 90r, 110plus, 111, 130, 130nr)

Introduction

The System Maintenance Utility is designed to assist the customer with common maintenance tasks for the printer and also to resolve common problems that they may encounter.

NOTE: Print jobs must not be sent to the printer while the system maintenance utility is in use.

Since the design of the System Maintenance Tool is different between the Designjet 120/120nr and Designjet 130/130, this chapter will explain how to use the tool for each product separately:

Launching the System Maintenance Utility

The procedures described here are applicable to the following printers: HP Designjet 30, 30n, 70, 90, 90r, 100+, 110+r, 110+nr, 111 with roll, 111 with tray, 130, 130r, 130nr:

There are two ways of launching the System Maintenance Utility.

From your computer's desktop (Windows, Mac OS 9 and X)

1. Double click the *hp designjet system maintenance* icon on the desktop.

2. A printer selector window opens - select your printer from the list.

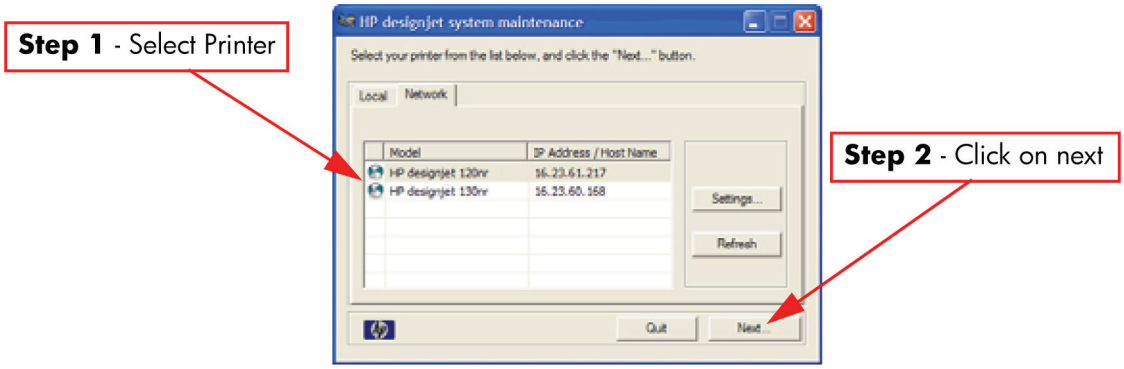

3. Click **Next** (in Windows) or **Configure** (in Mac OS).

From the Printer Driver (Windows, Mac OS X)

- In the Windows driver click the *hp designjet system maintenance* icon in the **Services** tab.

- In Mac OS X, select the Printer in the *Print Center* or *Print Setup Utility* and click **configure**.

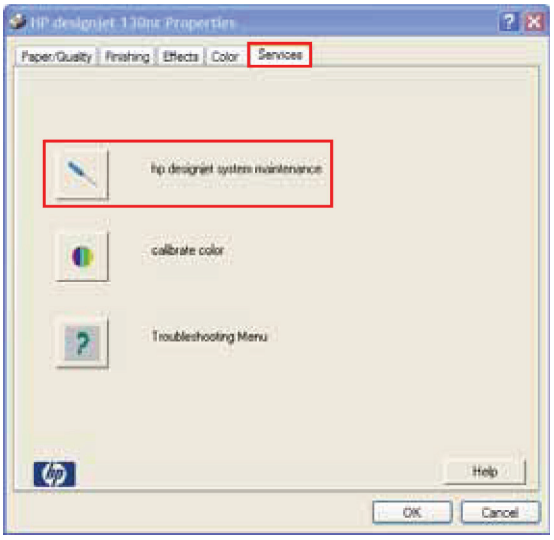

NOTE: When you finish using the System Maintenance Utility, you must click on exit on the left hand column before closing the browser.

System Maintenance Utility (Designjet 30, 30n, 70, 90, 90r, 110plus, 111, 130, 130nr)

Main Menu - Printer Front Panel Replication

The main page of the System Maintenance Utility includes a replica of the Printer's Front Panel showing the status of the Printer.

NOTE: The replica Front Panel does not show the real-time status. It is a snapshot which can be refreshed by pressing the refresh button either on the web browser toolbar or in the actual replica window.

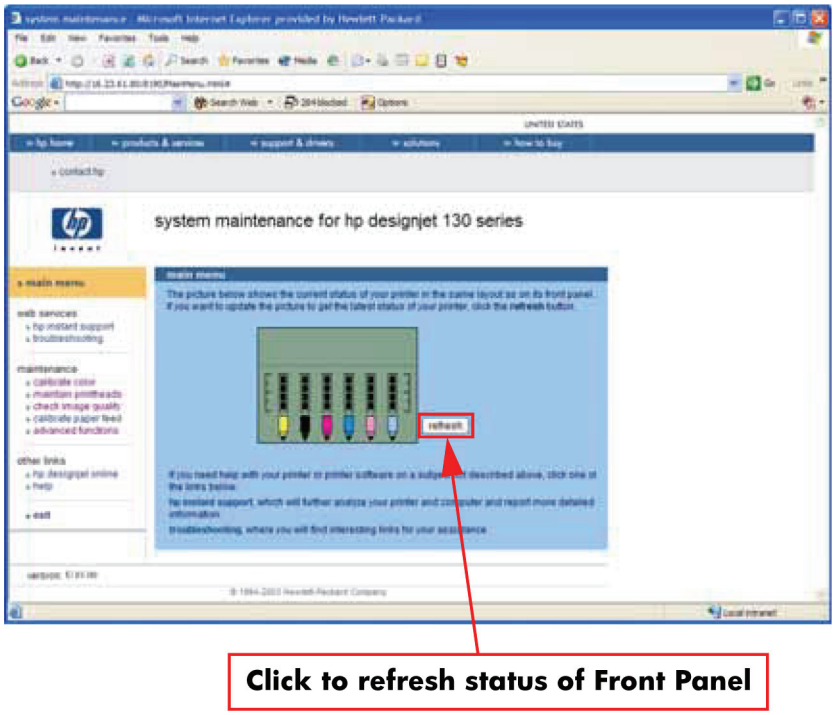

Color Calibration

NOTE: The Color Calibration is only available for the following printers: HP Designjets 30, 30n, 90, 90r, 130, 130nr. It is not available for the HP Designjets 70, 110plus, 111.

NOTE: The Color Calibration should ONLY be performed by the user when required.

Question	Answer
Why calibrate color?	**Calibrate color** performs a maintenance function to ensure color consistency. If you calibrate correctly, the colors printed on printers with different printheads will look very similar. This picture shows an exaggerated example of how a printout could look like before and after color calibration.

Question	Answer
When do I calibrate color?	It is recommended that you **calibrate color** every time you replace a printhead or when you perceive color degradation on the printouts. There is no need to perform this operation each time you print. The results of the color calibration will be applied to all print jobs that follow, even if you power off the printer. Perform color calibration if you print with the regular hp designjet 120 printer driver, which was included with the printer or which you downloaded from the Web. If you use a PostScript driver such as Adobe PS or LaserWriter to print through a PostScript RIP provided by HP or another third-party company, the results of **calibrate color** will not be applied to your print jobs. In this case, refer to your PostScript RIP documentation for information on how to perform color calibration.
How do I calibrate color?	You have to **calibrate color** for every Paper Type that requires color consistency. For example, if you require consistent colors on glossy paper and on heavy weight coated paper, you must perform one color calibration for the former and another for the latter Paper Type. When you want to calibrate color, remember to select the Print Quality option that you are going to use to print. For example, if you want to print with the High Resolution option, select High Resolution before performing the color calibration. **NOTE:** If the Color calibration fails, print the information page and check the list of warnings under the printer status section.

Performing the Color Calibration (HP DesignJet 30, 30n,130, 130nr)

▲ The following shows how to perform the Color Calibration for the HP Designjet 30, 30n, 130, 130nr.

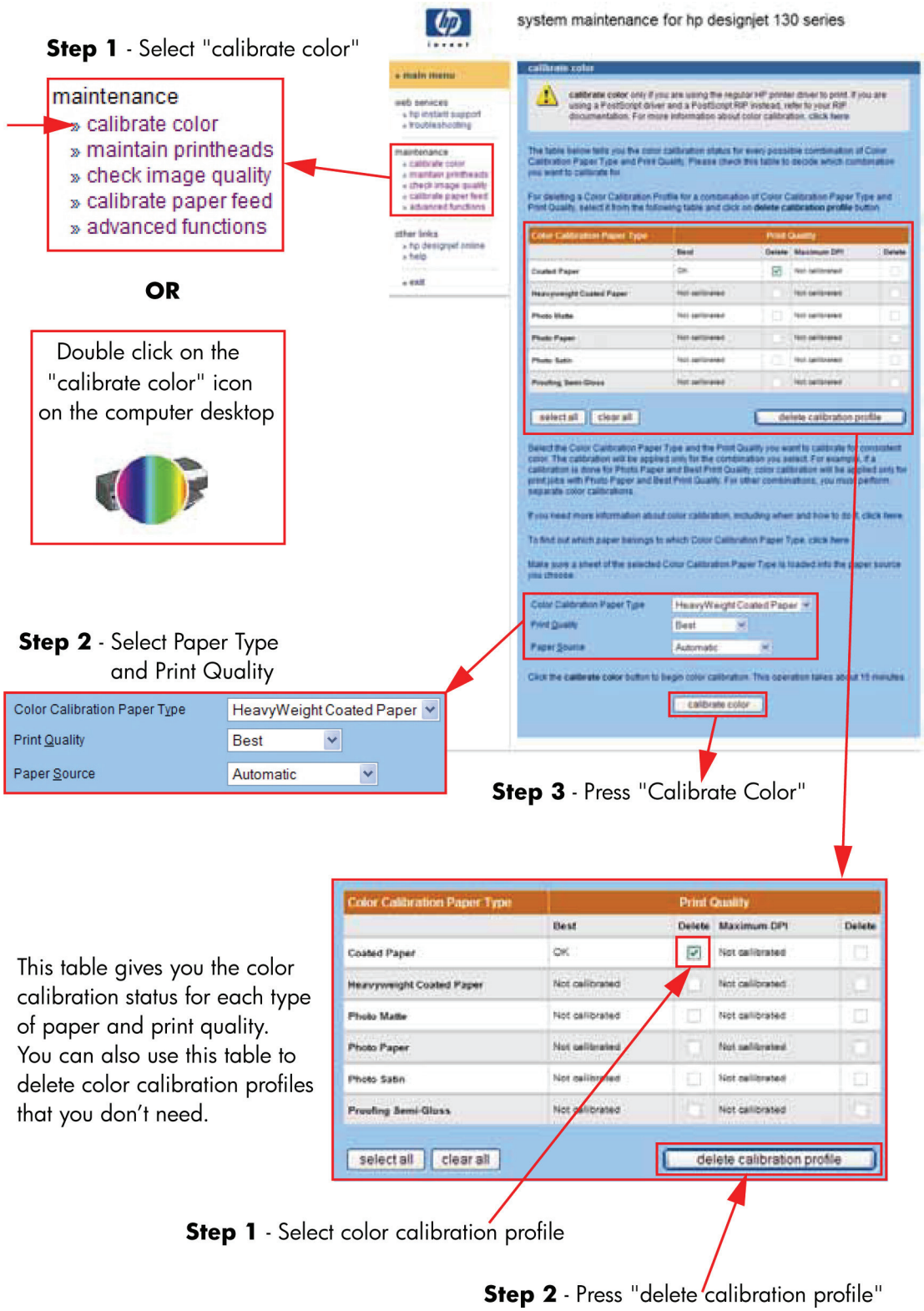

Performing the Color Calibration (HP DesignJet 90, 90r)

▲ The following shows how to perform the Color Calibration for the HP Designjet 90 and 90r.

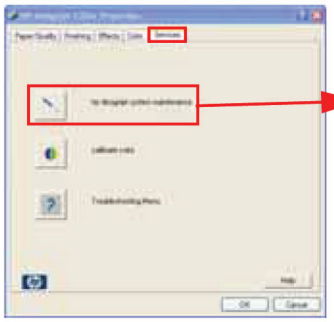

Launch system maintenance tool via the hp driver

OR

Double click on the "calibrate color" icon on the computer desktop

Step 1 - Select "calibrate color"

maintenance
- » calibrate color
- » maintain printheads
- » check image quality
- » calibrate paper feed
- » advanced functions

Step 2 - Select Paper Type and Print Quality

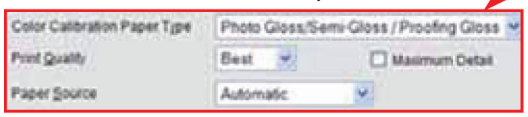

Step 3 - Press "Calibrate Color"

This table gives you the color calibration status for each type of paper and print quality. You can also use this table to delete color calibration profiles that you don't need.

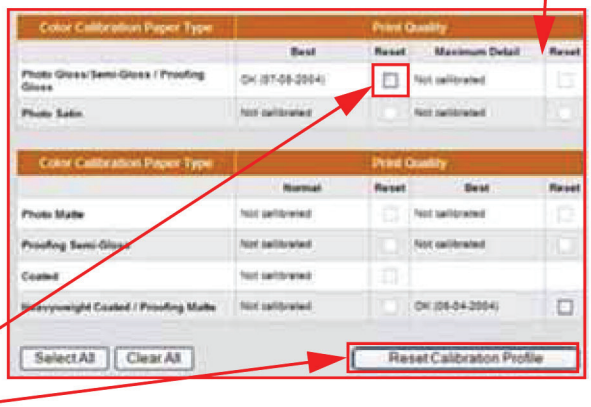

Step 1 - Select color calibration profile

Step 2 - Press "delete calibration profile"

Sample of the Color Calibration Print:

▲ Shown below is what the Color Calibration print looks like.

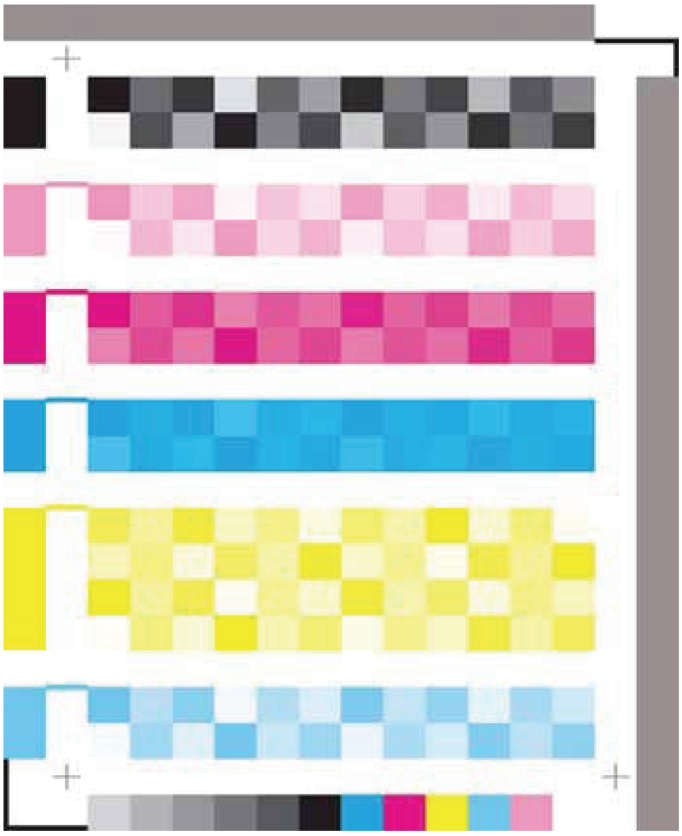

Align Printheads

Align printheads performs a maintenance function with the printheads. Proper alignment insures correct registration between ink colors while printing. This is only recommended if you are experiencing problems with print quality.

Before you continue, please verify that three sheets of paper are loaded in the default tray. If the printhead alignment fails on the first attempt, the printer will retry the alignment twice.

NOTE: Do not power off the printer during this operation. The printer display will indicate busy until the operation is finished.

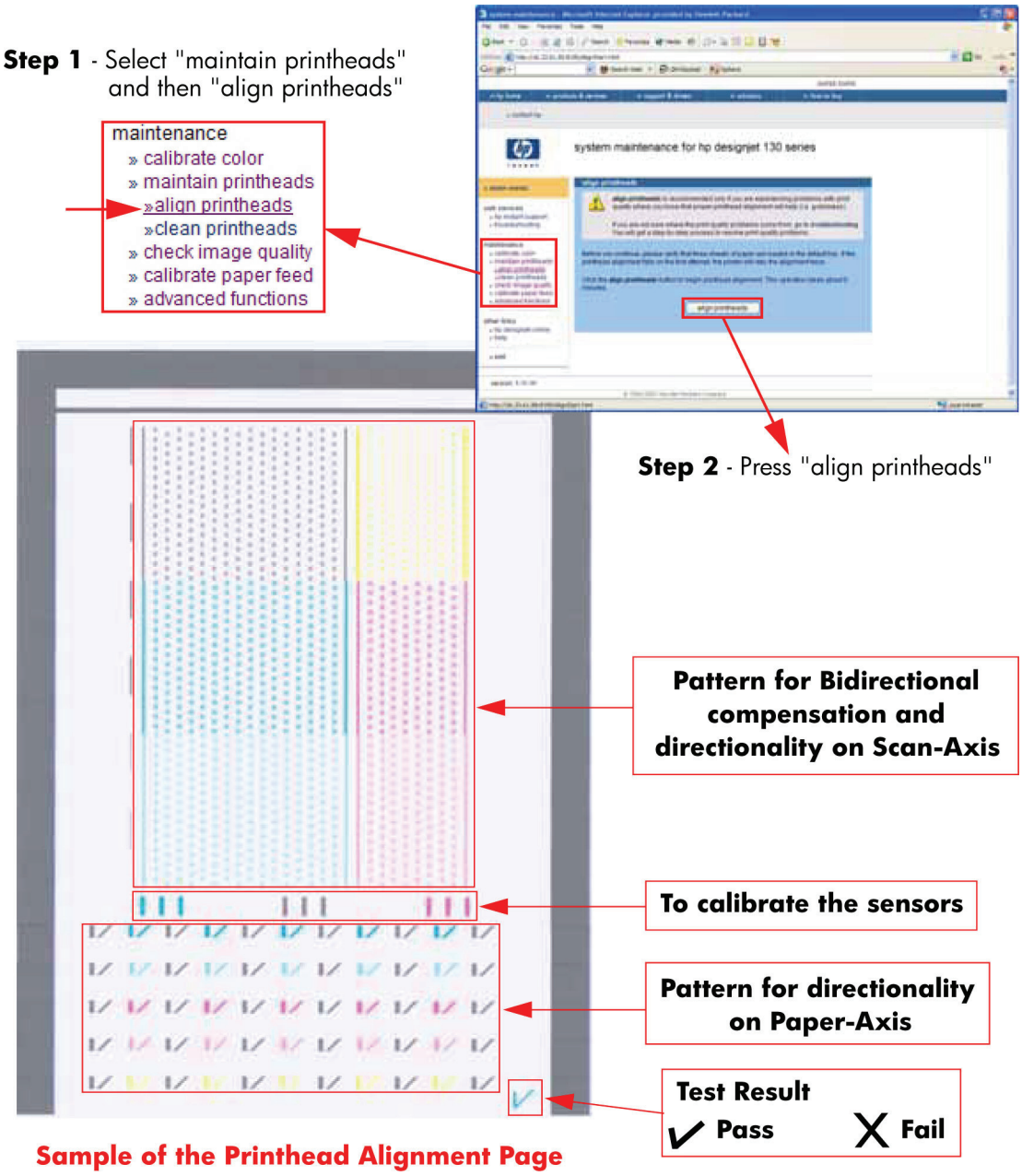

Sample of the Printhead Alignment Page

Clean Printheads

Clean printheads helps maintain proper operation of all nozzles in the printheads. This is only recommended if you are experiencing problems with print quality such as banding.

Three levels of cleaning are available: soft, medium and hard. As a first step, the soft cleaning should be used. If you still experience the same image problems, then select medium. Hard cleaning should only be used as a last resort.

NOTE: Do not power off the printer during this operation. The printer display will indicate busy until the operation is finished.

Before cleaning the printheads, first check the maximum recovery level already performed on the printheads. If hard level (Recovery Level 3) has already been performed, then do not try performing hard level again. The Maximum Recovery Level can be seen on the Printer Information page in the "Printhead History" section.

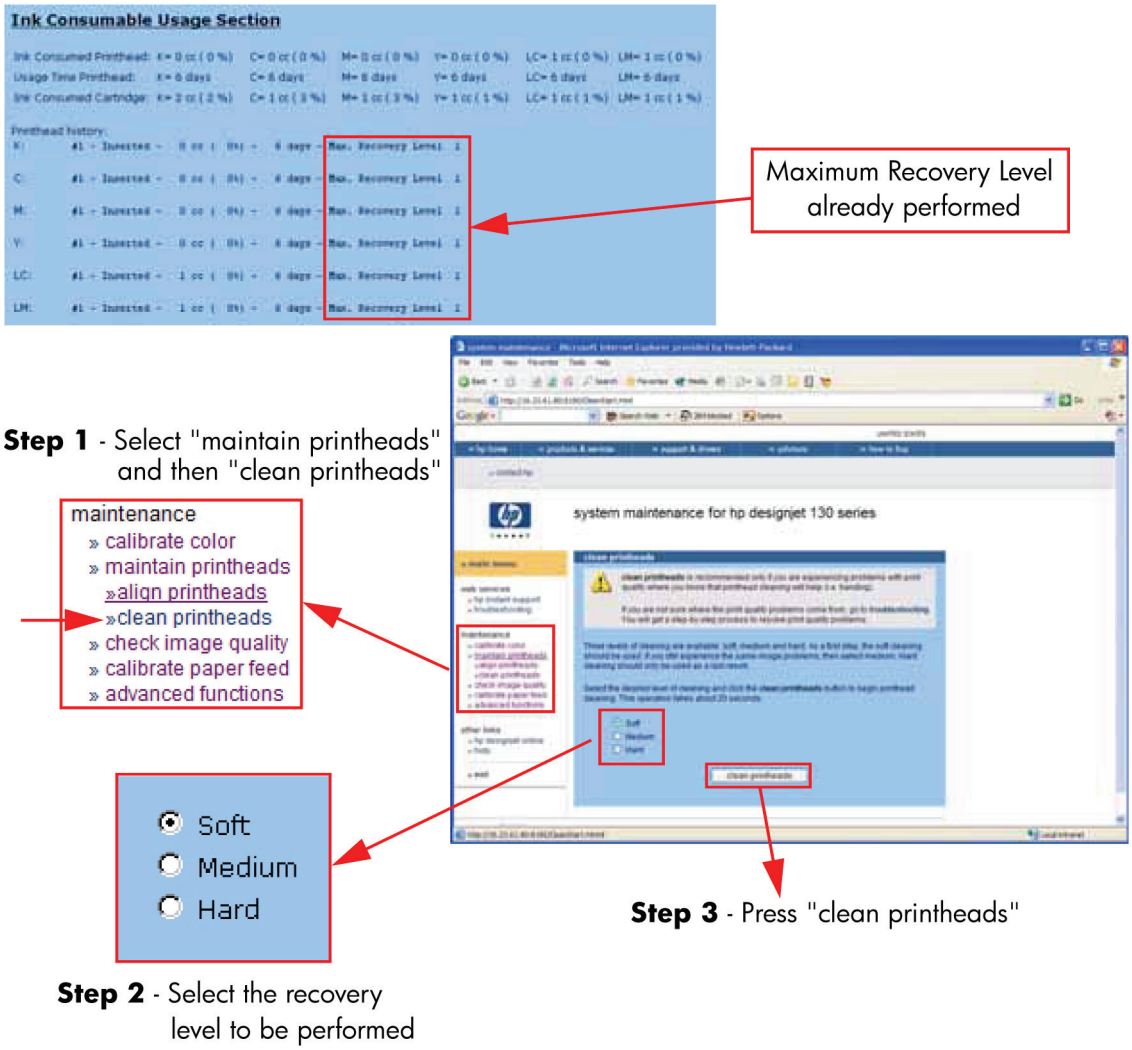

Check Image Quality

Check image quality provides two diagnostic pages for printing. The following test pages are available:

- Image Quality Diagnostic page.
- Skew Diagnostic page.

These commands only print the diagnostic pages and do not provide the actual analysis of the results.

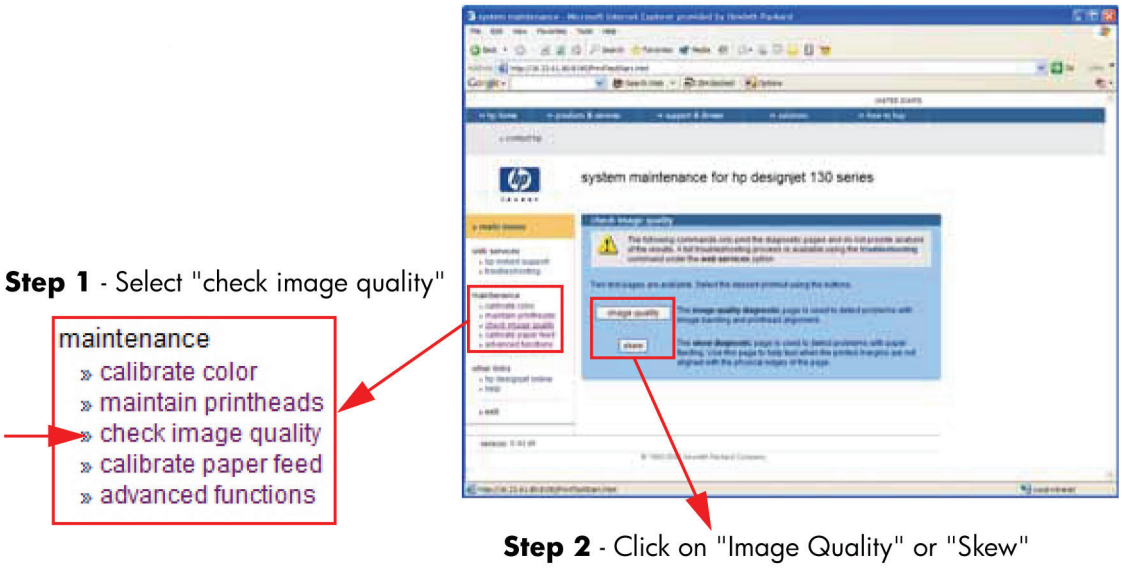

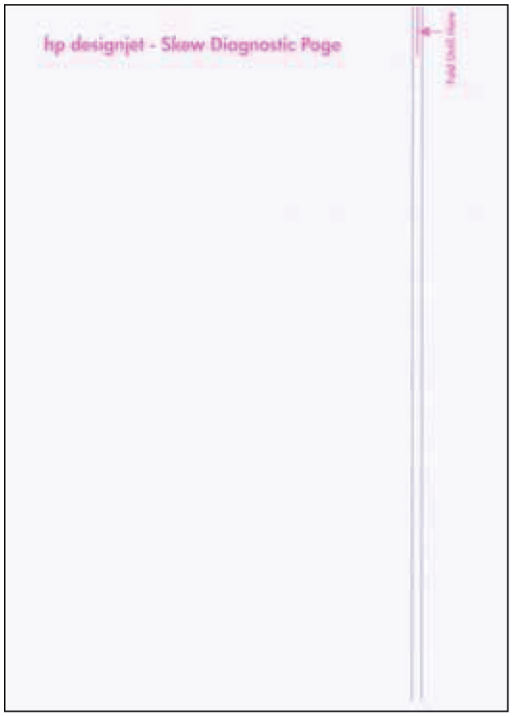

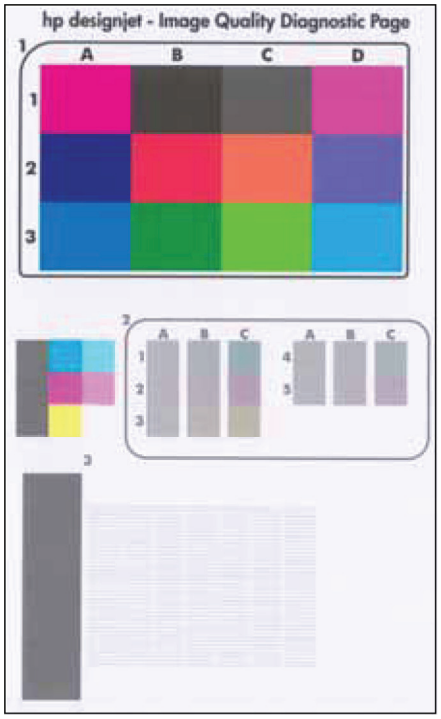

Calibrate Paper Feed

Calibrate paper feed is used to adjust the printer parameters for use with different types of print media. This only affects the physical movement of paper and does not affect the color calibration profiles.

This calibration is a two-step process. Step one is to print a special test page with the paper calibration test pattern. This page must be printed on A3 or 11x17 paper sizes. After printing the test page, you must feed the test page back into the printer via the front single-sheet paper feed.

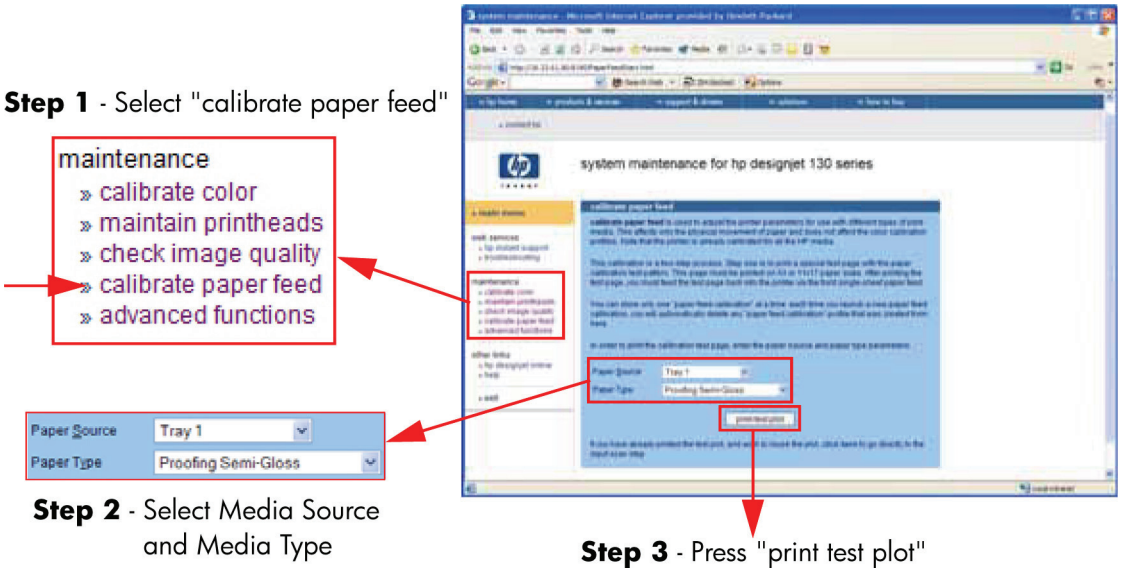

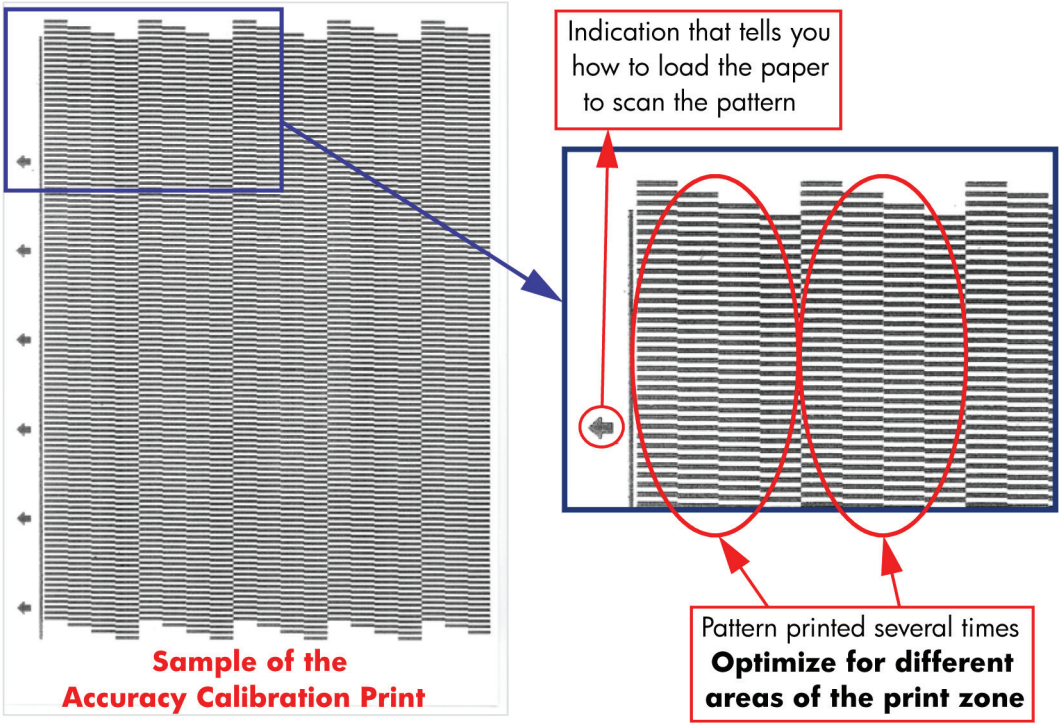

Once the Accuracy Calibration has been printed, rotate the page and reload it upside down (image facing down).

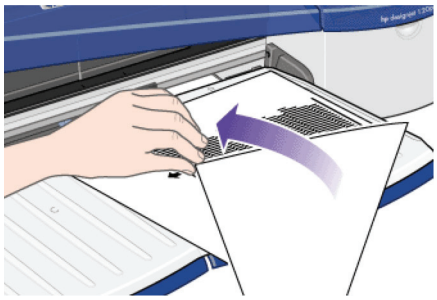

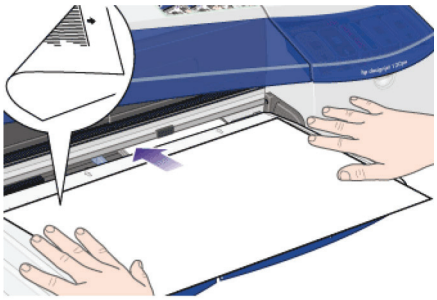

Step 1 - Rotate the page and reload it upside down (image facing down).

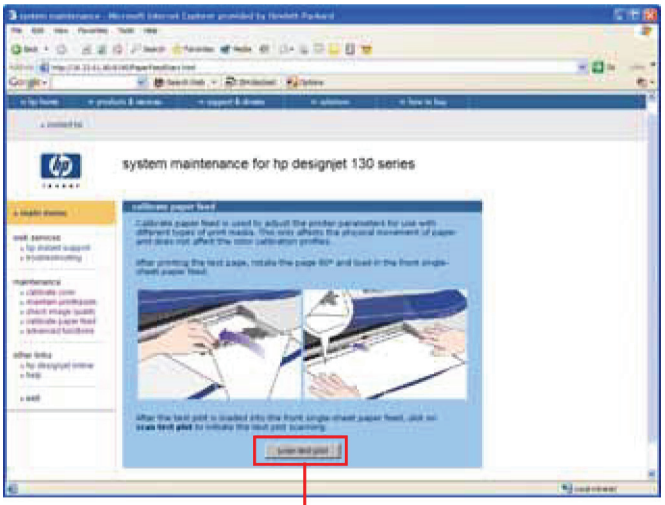

Step 2 - Press "scan test plot"

Step 2 - Press **scan test plot**.

Get Printer Information

This option allows you to view all the information available on the Printer:

- Printer Identification.
- Printer Status.
- Printer Job Queue.
- Printer Errors and Warnings.
- Printer Usage.
- Ink Consumable Identification.
- Ink Consumable Status.
- Ink Consumable Usage.
- Network Card Information.

Refer to the Test Prints on page 1 chapter for explanations on each section.

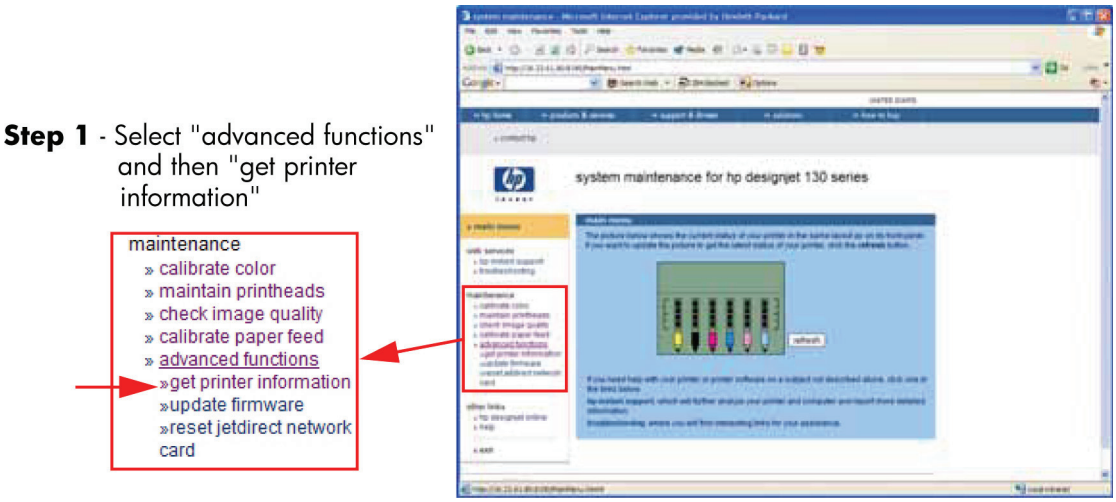

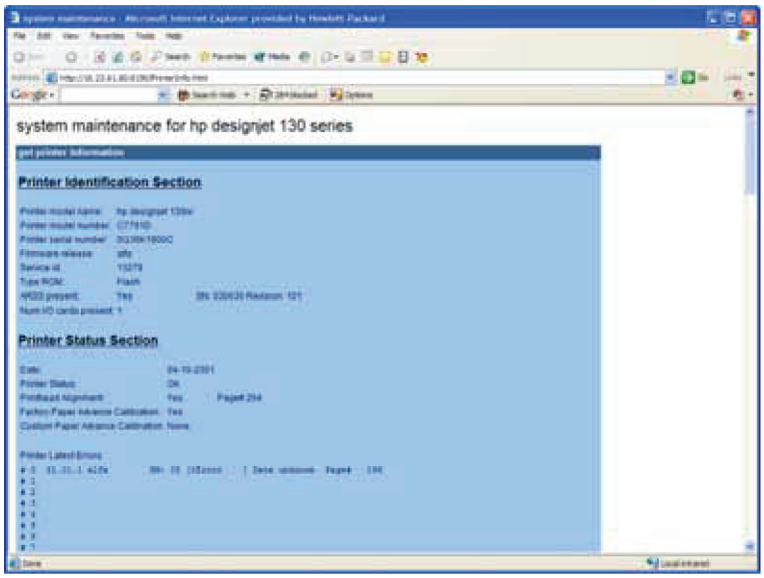

Sample of the information page

Update Firmware

Update firmware updates the built-in software of the printer.

NOTE: Do not power off the printer during this operation. The printer display will indicate busy until the operation is finished.

The first steps will check to see if a newer version of the printer's software is available at hp.com. If there is new software available, follow the on-screen instructions to upgrade the printer software.

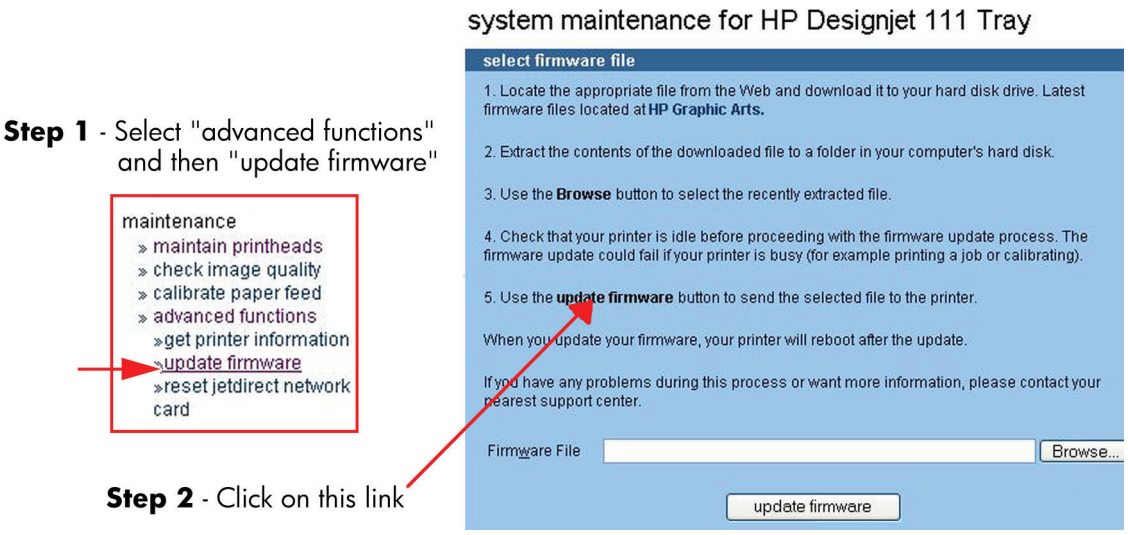

Reset Jetdirect Network Card

Use this function to reset the HP Jetdirect Network card configuration to the factory defaults. This should only be used if the HP Jetdirect Network card is not responding and no other recovery method works.

Any user configuration information, for example the IP address, will be lost. In this case the *system maintenance* utility will not be able to communicate with the printer using the network.

The HP Jetdirect Network card will need to be reconfigured, using WebJetAdmin for example, after this reset.

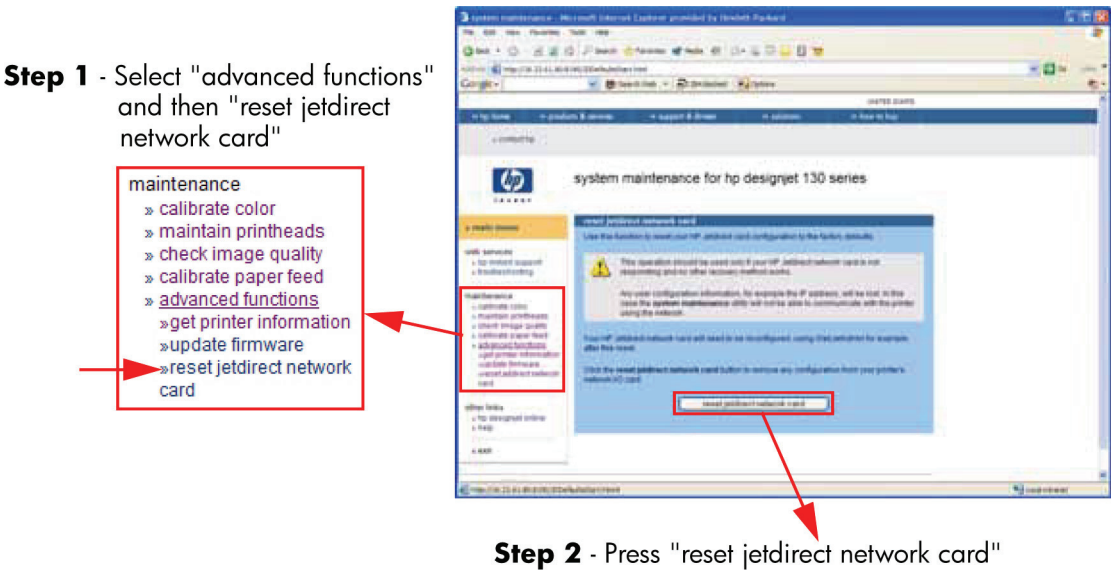

4 Utilities

Utilities

The following Utilities are available through the printer:

1. Enable/disable buzzer, refer ⇒ Enable/Disable Buzzer on page 54.

   This utility allows you to switch Off or On the internal buzzer.

2. Transport Position, refer ⇒ Transport Position on page 54.

   This utility allows you to put the printer in a stable condition before transporting it to another location.

3. Printhead Recovery, refer ⇒ Printhead Recovery on page 55.

   This utility helps maintain proper operation of all nozzles in the printheads. This is only recommended if you are experiencing problems with print quality such as banding.

4. Network Card Reset, refer ⇒ Network Card Reset on page 56.

   Use this utility to reset the HP Jetdirect card configuration to the factory defaults. This should only be used if the HP Jetdirect card is not responding and no other recovery method works.

5. Set to Factory Defaults, refer ⇒ Set to Factory Defaults on page 56. **RESTRICTED ACCESS**

   Use this utility to return to the default settings that were set in the factory.

6. Hard EEPROM reset, refer ⇒ Hard EEPROM reset on page 57. **RESTRICTED ACCESS**

   This utility allows you to reset the EEPROM inside the Printer.

7. Set Flag to Prime Tubes, refer ⇒ Set Flag to Prime Tubes on page 57. **RESTRICTED ACCESS**

   The purpose of this utility is to prime the Ink Supply Tubes after they have been replaced (or if a situation arises where you need to force the priming).

How to Access Restricted Access Utilities

Some of the Service Utilities are restricted to HP qualified personnel only. To access these restricted service utilities, while the printer is switched OFF, press both the resume and power buttons together until the Tool icon appears on the front panel.

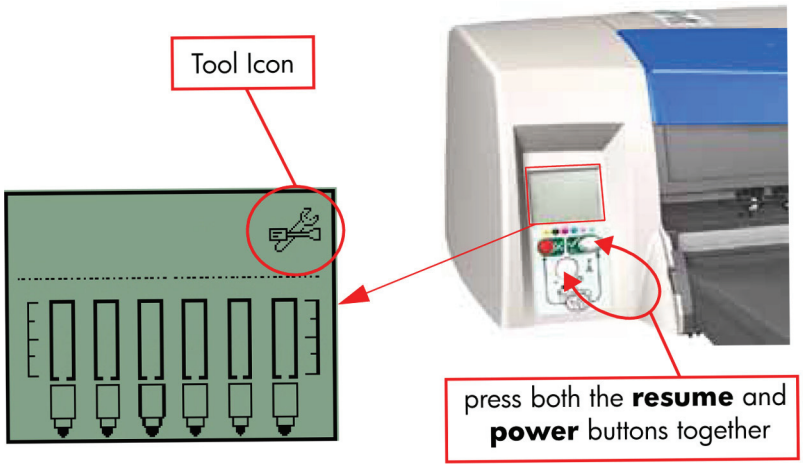

Enable/Disable Buzzer

This utility allows you to switch Off or On the internal buzzer.

Switch Off or On the buzzer as follows:

1. Hold the power button down and press the cancel button **five times**.

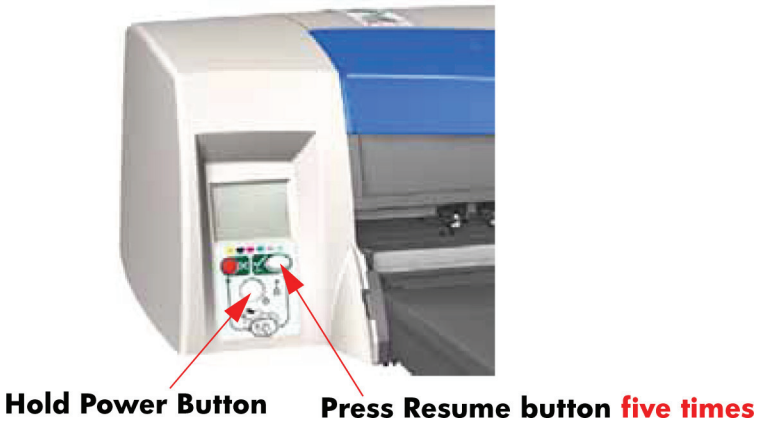

2. Turn the Printer Off and then On again.

Transport Position

This utility allows you to put the printer in a stable condition before transporting it to another location.

Place the Printer in Transport Position as follows:

▲ Hold the power button down and press the cancel button **twice** and the resume button **three times**.

Printhead Recovery

This utility helps maintain proper operation of all nozzles in the printheads. This is only recommended if you are experiencing problems with print quality such as banding.

Three levels of recovery are available: soft, medium and hard. As a first step, the soft recovery should be used. If you still experience the same image problems, then select medium. Hard recovery should only be used as a last resort.

Before recovering the printheads, first check the maximum recovery level already performed on the printheads. If hard level (Recovery Level 3) has already been performed, then do not try performing hard level again. The Maximum Recovery Level can be seen on the Printer Information page in the "Printhead History" section.

Perform the Printhead Recover as follows:

▲ Depending on the Recovery level, hold the power button down and then press:

- For level 1 (soft) - the cancel button **twice**.
- For level 2 (medium) - the cancel button **twice** and the resume button **once**.
- For level 3 (hard) - the cancel button **twice** and the resume button **twice**.

Some Light Magenta Printheads will show degradation after 150cc of usage. This results in certain shift to green. If both of these conditions, 150cc and up and shift to green are apparent, then the following Printhead Recovery has to be performed.

⚠ **WARNING!** This Printhead Recovery is quite strong and should only be executed when both of the above conditions occur. Also, before performing the Light Magenta Printhead Recovery, make sure that the Network, USB or Parallel cable is disconnected from the Printer.

- For Light Magenta Printhead degradation (standard recovery) - the cancel button **twice** and the resume button **five times**.

A less aggressive recovery can be performed as well, currently it is not in use:

- For Light Magenta Printhead degradation (light recovery) - the cancel button **twice** and the resume button **four times**.

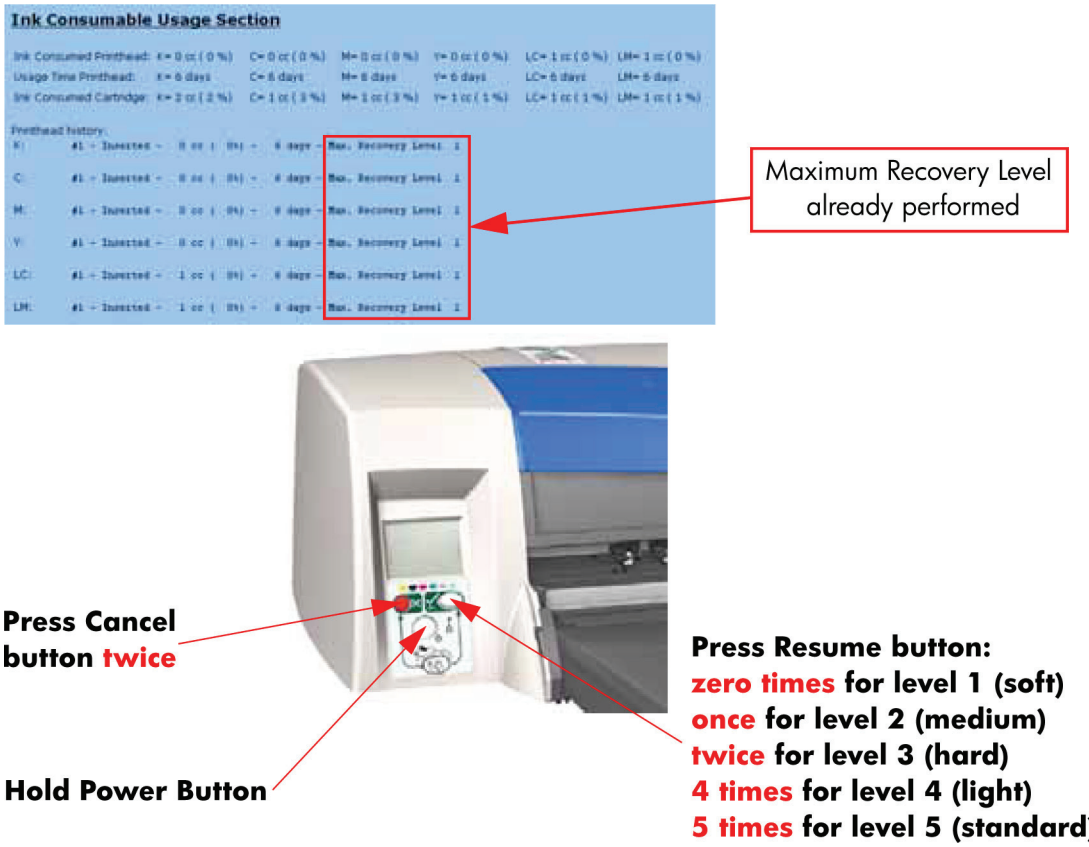

Network Card Reset

Use this utility to reset the HP Jetdirect card configuration to the factory defaults. This should only be used if the HP Jetdirect card is not responding and no other recovery method works.

Any user configuration information, for example the IP address, will be lost. In this case the computer will not be able to communicate with the printer using the network.

The HP Jetdirect card will need to be reconfigured, using WebJetAdmin for example, after this reset.

Reset the Network Card as follows:

▲ Hold the power button down and press the cancel button **three times** and the resume button **once**.

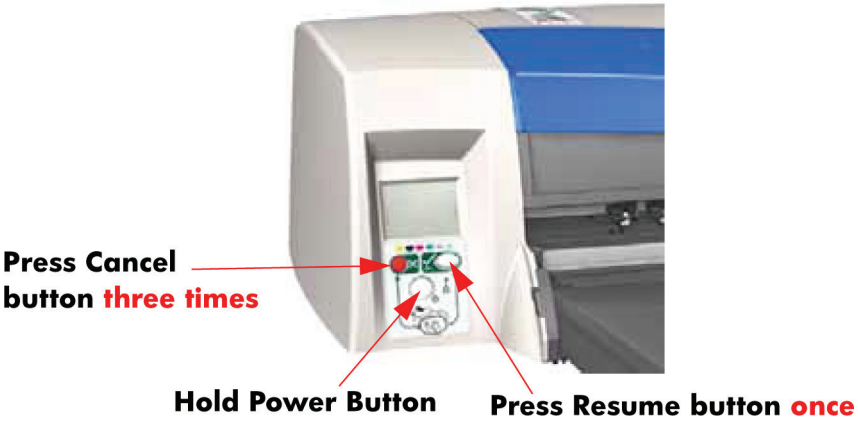

Set to Factory Defaults

Use this utility to return to the default settings that were set in the factory.

Return to Factory Defaults as follows:

▲ Hold the power button down and press the cancel button **three times** and the resume button **twice**.

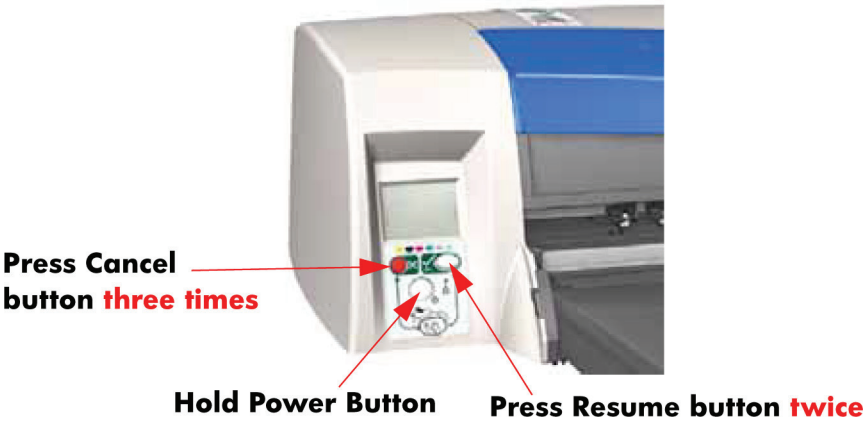

Hard EEPROM reset

This utility allows you to reset the EEPROM inside the Printer. A hard EEPROM reset is **ONLY** recommended when you need to install a used Electronics Module in a different Printer. This is because there is a discrepancy between the values of the Carriage EEPROM and the Electronics Module EEROM and since the values of the Electronics Module EEPROM are incorrect, a hard EEPROM reset will empty the Electronics Module EEPROM. This will then force the Electronics Module EEPROM to collect the values from the Carriage EEPROM when the Printer is next powered up.

NOTE: After a hard EEPROM reset, the Printer will act like a new Printer and try to prime the Ink Supply Tubes when the Printer is next powered up.

Reset the EEPROM as follows:

▲ Hold the power button down and press the cancel button **three times** and the resume button **four times**.

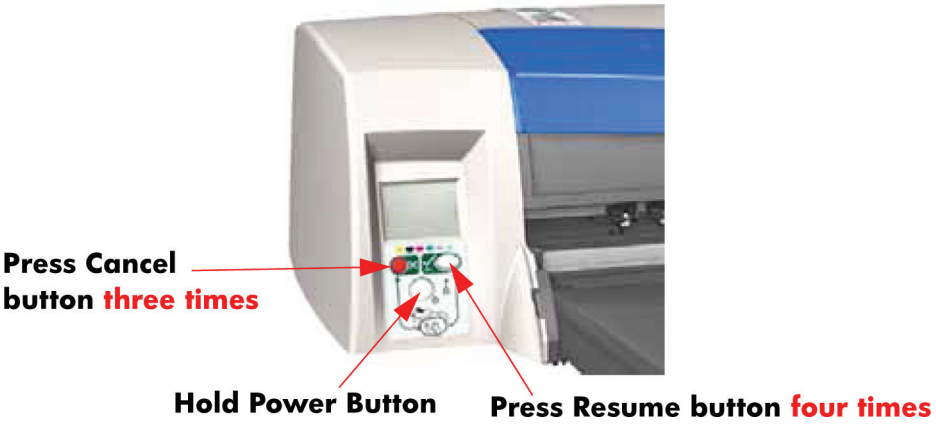

Set Flag to Prime Tubes

The purpose of this utility is to prime the Ink Supply Tubes after they have been replaced (or if a situation arises where you need to force the priming procedure).

Prime the Ink Supply Tubes as follows:

NOTE: Make sure that you install Printheads that haven't had priming already done to them.

1. Hold the power button down and press the cancel button **three times** and the resume button **three times**.

2. Switch Off the printer and then On again in order to start the priming of the Ink Supply Tubes.

5 Calibrations

- PRS Adjustment
- Manual PRS Adjustment
- Factory Accuracy Calibration
- Parts replacement and associated calibrations

PRS Adjustment

When Required

It is very important that you perform the PRS Adjustment whenever:

- The Pivot Assembly is removed **or** replaced.
- The Feed Roller Assembly is removed **or** replaced.
- The Carriage Assembly is replaced (it is not necessary to perform the PRS Adjustment if the carriage is reseated).

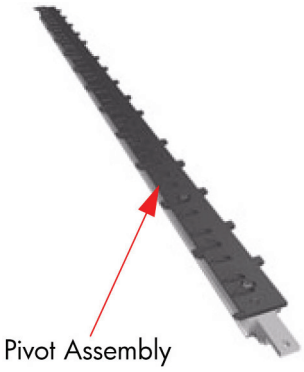

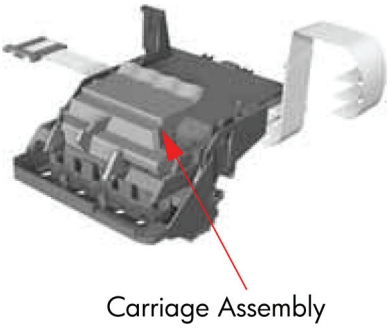

NOTE: B-size printers do not need Prs Adjustment.

Manual PRS Adjustment

The purpose of the Manual PRS Adjustment is to adjust the distance between the Carriage Assembly and the Pivot Assembly. This adjustment is necessary in order to prevent problems like Printhead crashes.

Perform the Manual PRS Adjustment as follows:

The Manual PRS Adjustment should be carried out using the Carriage Height Tool.

Carriage Height Tool

During the Manual PRS Adjustment procedure the Carriage Assembly has to be moved along the length of the printer. Make sure that the Carriage Assembly is only ever moved by pulling the belt and never by direct contact with the Carriage itself.

Correct: move using the belt.

Incorrect: never move using Carriage Assembly.

1. Turn On the Printer and open the Printhead Access Door.

   Make sure that you turn ON the Printer, otherwise you will NOT be able to open the Carriage Cover.

2. Open the Carriage Cover and install the Carriage Height Tool into the Magenta Stall - Make sure ALL the other printheads are already removed from the Carriage Assembly.

3. Close the Carriage Cover and switch OFF the Printer.

Make sure that you turn OFF the Printer, otherwise you will NOT be able to manually move the Carriage Assembly.

4. Move the Carriage Assembly to the left hand side of the Printer (to the position shown).

5. Using the belt, move the Carriage Assembly backwards and forwards over the Pivot Assembly (but staying on the left hand side of the printer), carefully listening for a scraping sound.

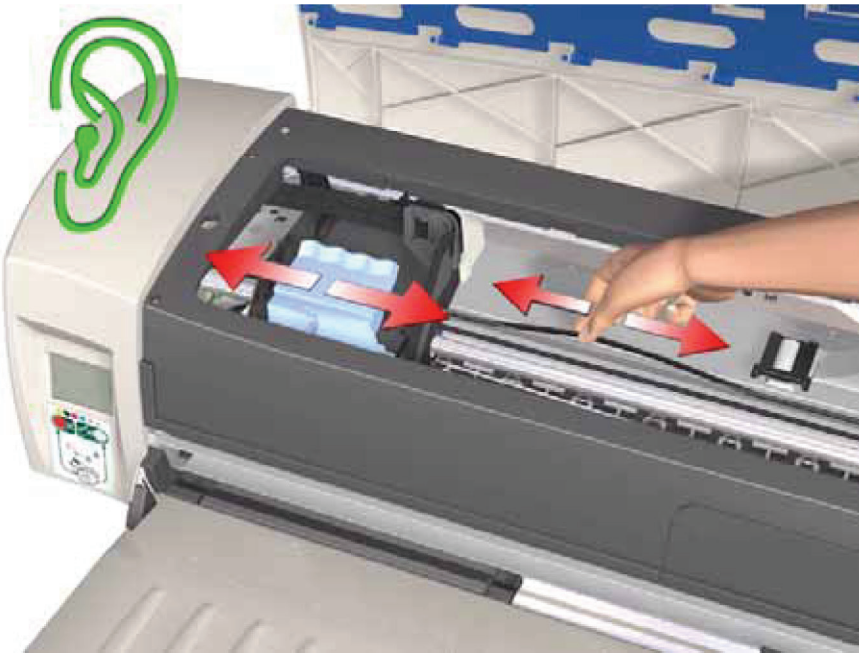

6. If you hear a scraping sound, that means that the Pivot Assembly is too high and needs to be lowered slightly. Lower the Pivot Assembly slightly by turning the T-8 screw 1/8th of a turn clockwise and then check for a scraping sound again as shown previously in **step 5**.

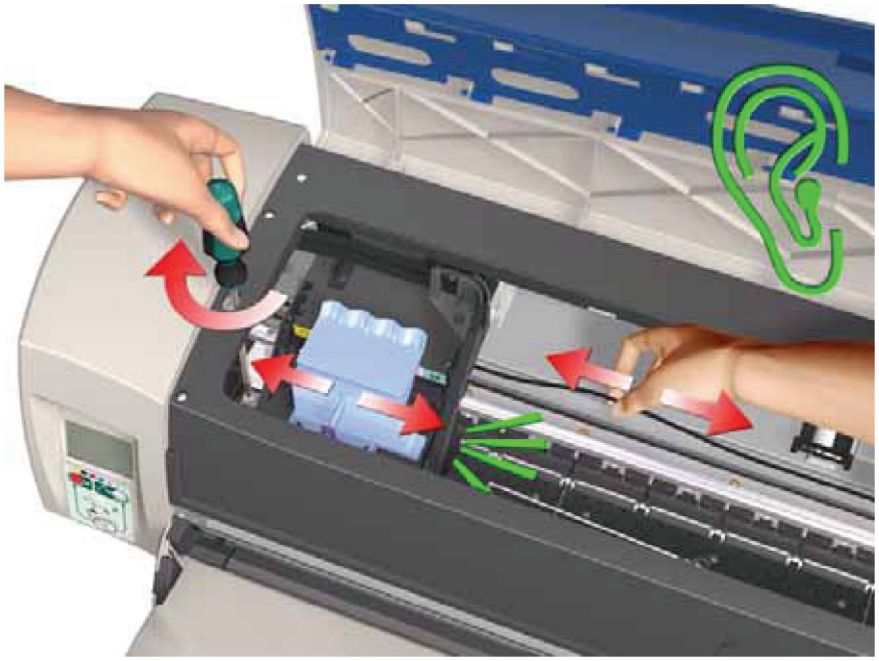

Figure 5-1 Cross-Section - Lowering the Pivot Assembly

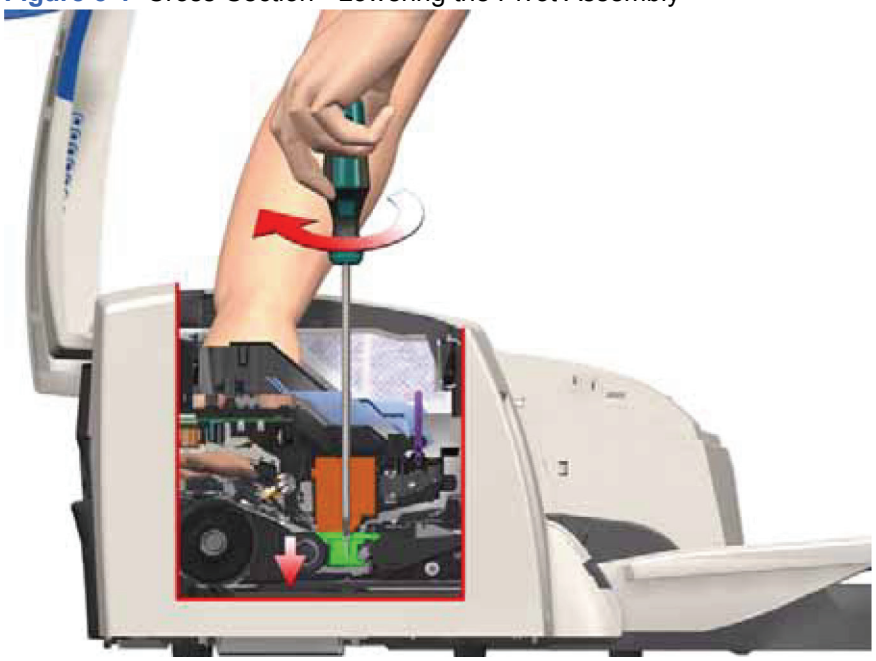

7. If you don't hear a scraping sound, that means that the Pivot Assembly is too low and needs to be raised slightly. Raise the Pivot Assembly slightly by turning the T-8 screw 1/8th of a turn anti-clockwise and then check for a scraping sound again as shown previously in **step 5**.

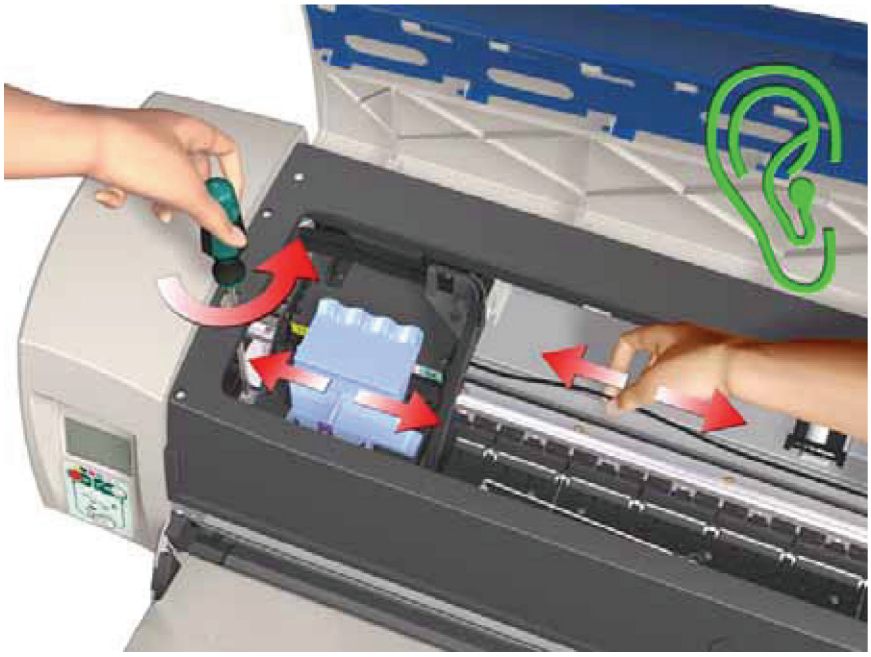

Figure 5-2 Cross-Section - Raising the Pivot Assembly

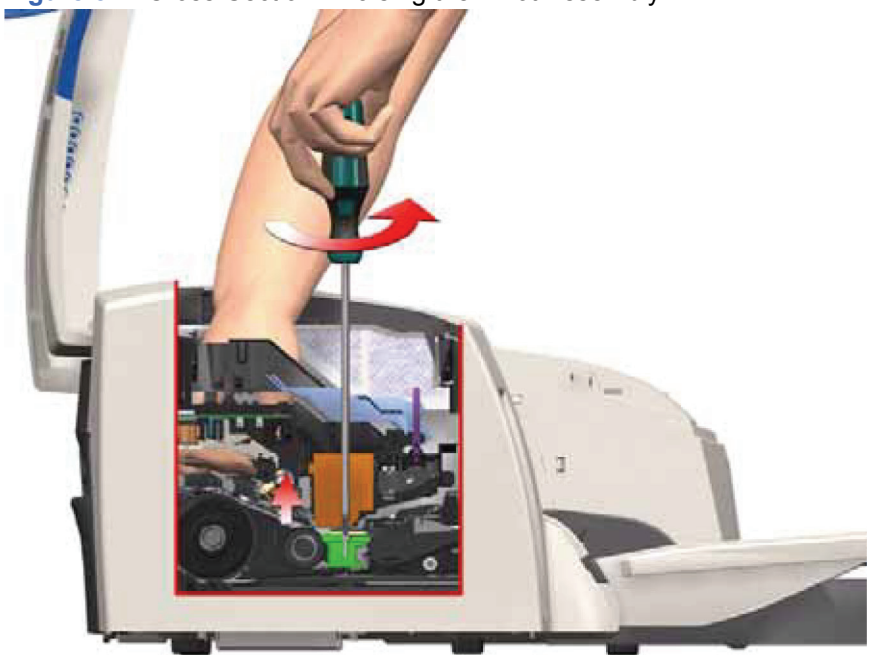

8. Repeat steps 5 to 7 until you reach a point where you will hear the scraping sound and by turning the screw just 1/8th of a turn clockwise, the scraping sound will disappear.

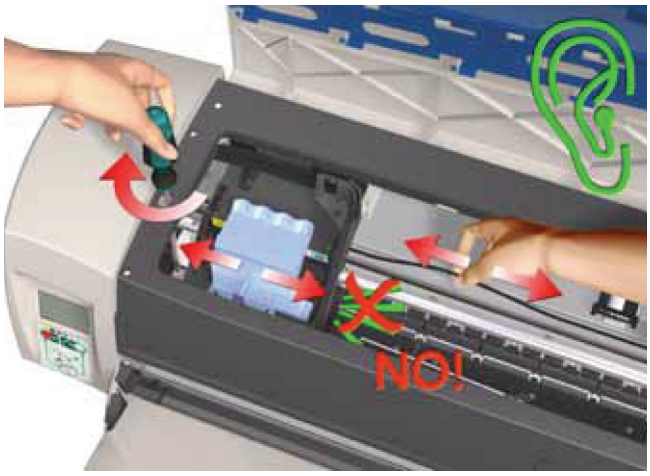

9. Move the Carriage Assembly to the right hand side of the Printer (to the position shown).

10. Using the belt, move the Carriage Assembly backwards and forwards over the Pivot Assembly (but staying on the right hand side of the printer), carefully listening for a scraping sound.

11. If you hear a scraping sound, that means that the Pivot Assembly is too high and needs to be lowered slightly. Lower the Pivot Assembly slightly by turning the T-8 screw 1/8th of a turn clockwise and then check for a scraping sound again as shown previously in **step 10**.

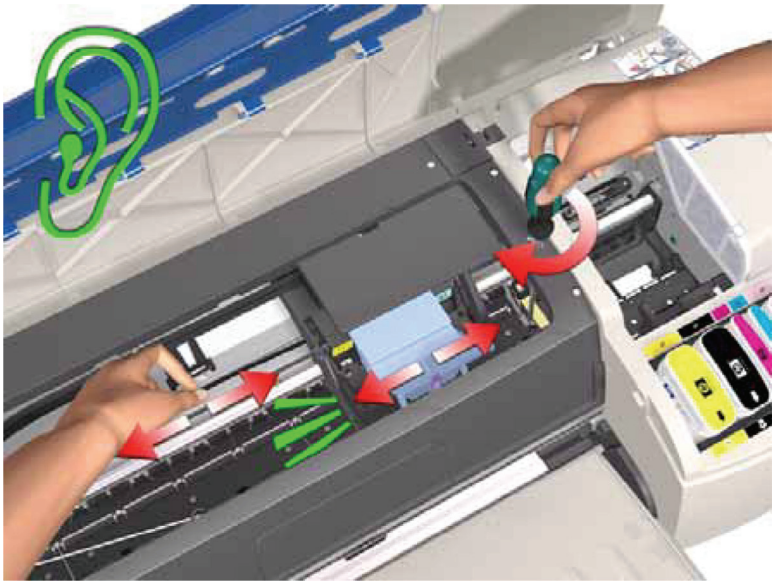

Figure 5-3 Cross-Section - Lowering the Pivot Assembly

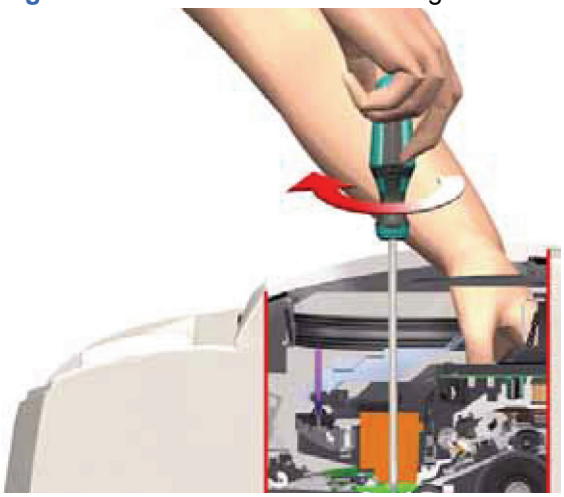

12. If you don't hear a scraping sound, that means that the Pivot Assembly is too low and needs to be raised slightly. Raise the Pivot Assembly slightly by turning the T-8 screw 1/8th of a turn anti-clockwise and then check for a scraping sound again as shown previously in **step 10**.

Figure 5-4 Cross-Section - Raising the Pivot Assembly

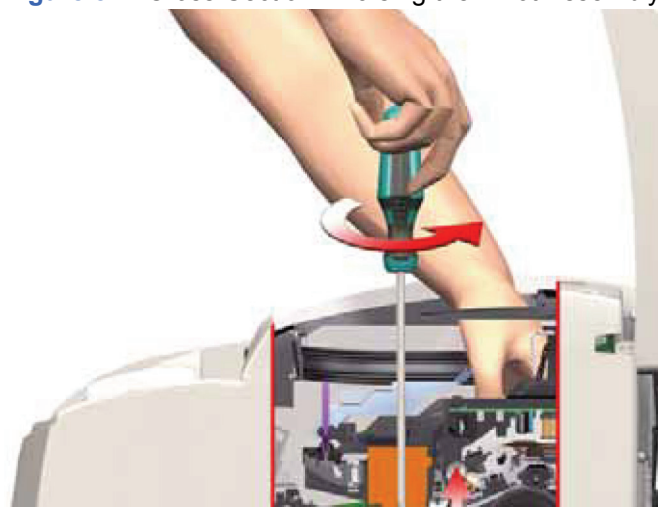

13. Repeat steps 10 to 12 until you reach a point where you will hear the scraping sound and by turning the screw just 1/8th of a turn clockwise, the scraping sound will disappear.

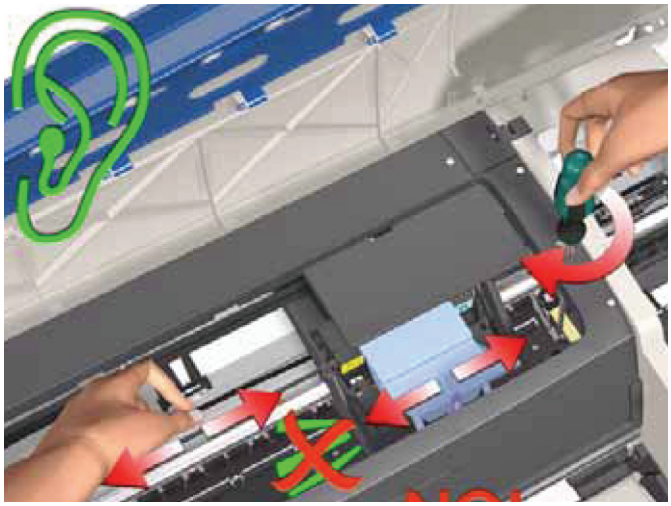

14. Move the Carriage Assembly along the length of the Printer, listening carefully for the scraping sound.

15. If you don't hear the scraping sound, then the PRS Adjustment is correct, go to **step 17**.

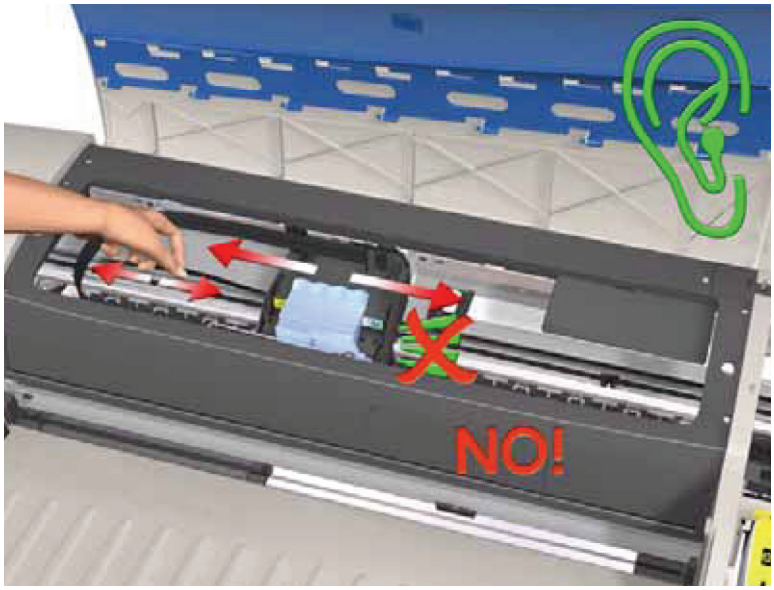

16. If you hear the scraping sound, then you will need to lower the Pivot Assembly slightly by turning the T-8 screw 1/8th of a turn clockwise on both the left and right hand side of the Pivot Assembly. Check for a scraping sound again as shown previously in **step 14**.

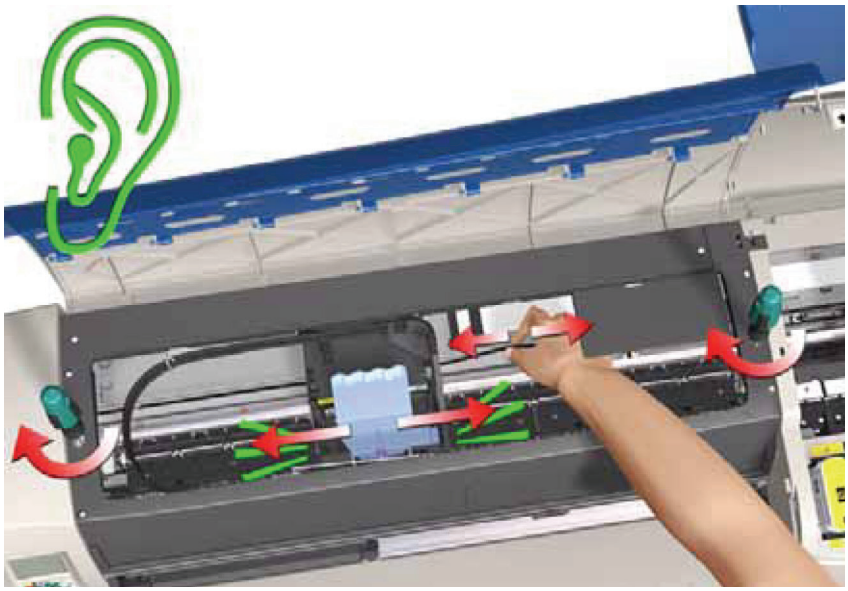

17. Remove the Carriage Height Tool.

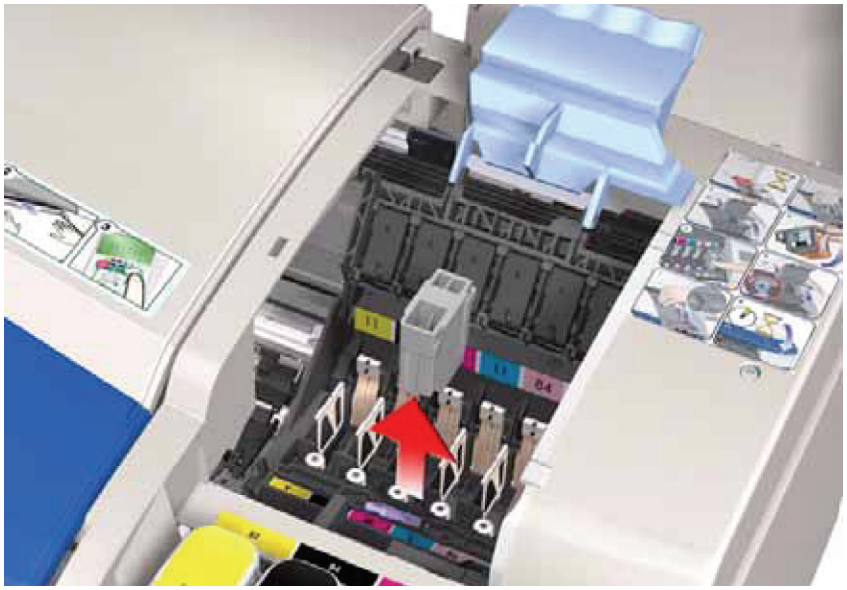

Factory Accuracy Calibration

NOTE: The Accuracy Calibration should ONLY be performed by a qualified Service Engineer.

Restricted Access

The Factory Accuracy Calibration needs to be performed whenever:

- Banding is detected in printed images.
- The Feed Roller Assembly is disassembled **or** replaced.
- The Paper-Axis Motor Drive Assembly is disassembled **or** replaced.
- The Encoder Disc is removed **or** replaced.

NOTE: Ensure that you use HP Professional High-gloss Contract Proofing Paper (Q8662A) in order to perform the Factory Accuracy Calibration.

NOTE: The B size printer (HP Designjet 30 Printer series) needs at least firmware B.05.XX to be able to perform this calibration

Perform the Accuracy Calibration as follows:

1. Load HP Professional High-gloss Contract Proofing Paper (Q8662A) in to the input tray (**HP Designjet 111 with Roll:** load the sheet via the front single-sheet paper feed).

2. To manually print the Factory Accuracy Calibration, hold the power button down and press the cancel button **once** and the resume button **once**.

3. Once the Accuracy Calibration has been printed, rotate the page and reload it upside down (image facing down).

4. To scan the Accuracy Calibration, hold the power button down and press the cancel button **once** and the resume button **four times**.

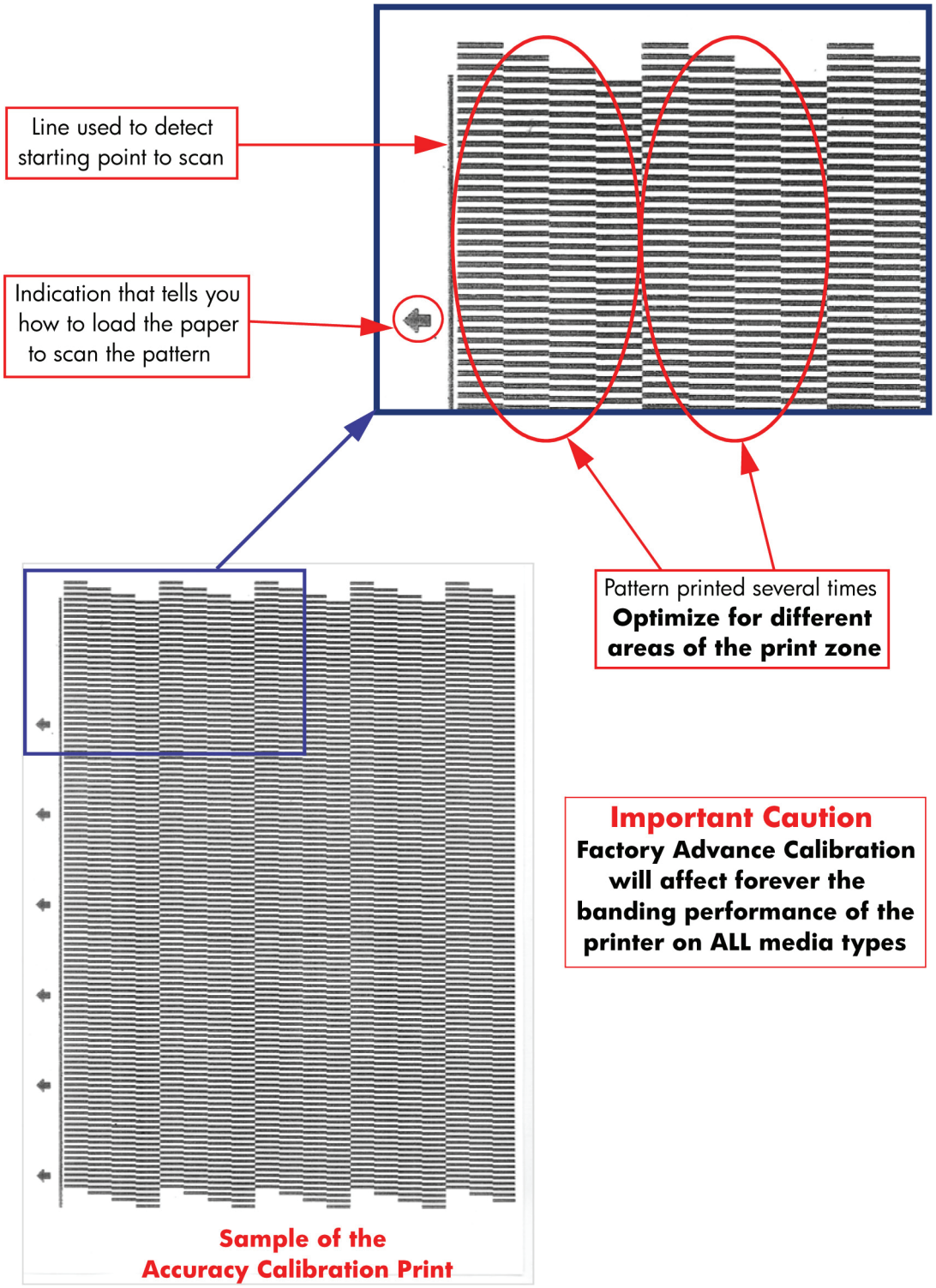

Parts replacement and associated calibrations

Following the removal and replacement of some components, it is important that calibrations are performed immediately afterwards. Shown below is a table describing which parts require calibrations when they are replaced, and the order in which you should perform the calibrations.

Description of service part	Media Advance Calibration	PRS Calibration	PRS Calibration
Print Platen SV		1	2

Pick Roller SV	1	2	3
Feed Roller	1	2	3
Inner Paper G SV	1	2	3
Carriage Belt SV			1
Lower Paper Guide Bits SV	1	2	3
Bypass Platen	1	2	3
Bypass Actuator	1	2	3
Carriage SV		1	2
Tubes SV			1
Pivot SV		1	2
Electronics Module			1
Disk Encoder	1		2

6 Parts and Diagrams

- Cover Assemblies
- Cover Assemblies
- Printer Labels
- Right Hand Assemblies
- Left Hand Assemblies
- Scan-Axis Assemblies
- Top Paper Path Assemblies (1 of 2)
- Top Paper Path Assemblies (2 of 2)
- Rear Paper Path Assemblies
- Paper Feed Assemblies
- Cable Harnesses
- Ink Supplies and Accessories (1 of 2)
- Ink Supplies & Accessories (2 of 2)
- Rollfeed Components
- Printer Stand and Basket

Cover Assemblies

Applicable Designjets: Only 30 series

Cover Assemblies			
Ref	**HP Part Number**	**Qty**	**Description/Comments**
1	C7790-60447	1	Left Cover (Includes Front Panel Label)
2	Q1293-67003	1	Left Trim
3	C7790-60456	1	Right Cover (includes Right Trim, Instruction Label, Ink Family Number Label and Ink Color Label)
4	Q1293-67000	1	Filter Assembly
5	C7790-60100	1	Back Cover (Center Cover)
6	C7790-60102	1	Front Cover
7	Q1292-67022	1	Door Sensor Assembly
8	C7790-60452	1	Ink Cartridge Door 30
	C7790-60453	1	Ink Cartridge Door 30n
9	C7790-60457	1	Printhead Door Assembly (includes Ink Cartridge Door Hinge and Printhead Door Label)
10	C7790-60443	1	Access Door Assembly

Figure 6-1 Cover Assemblies

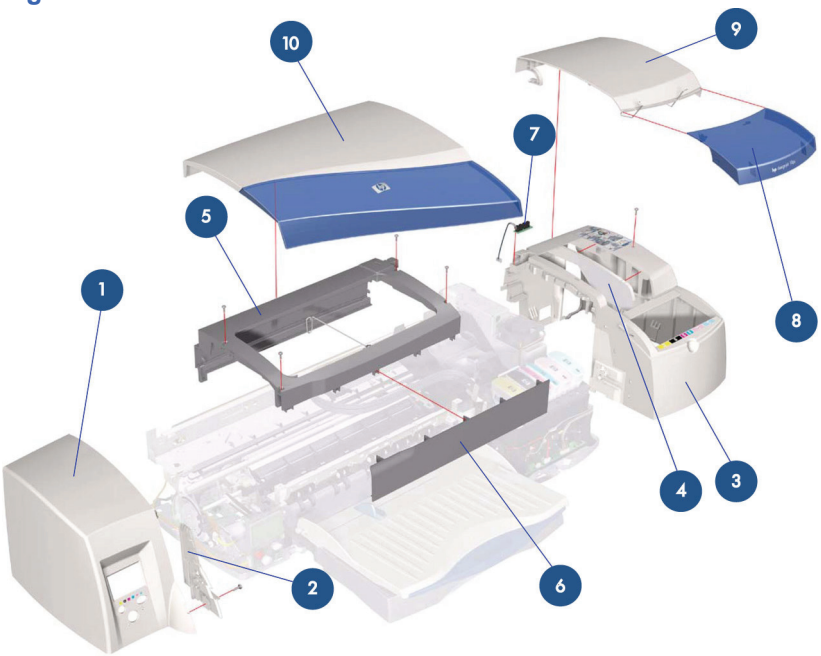

Cover Assemblies

Cover Assemblies			
Reference	**HP Part Number**	**Quantity**	**Description/Comments**
1	C7791-60300	1	Left Cover (Includes Front Panel Label) (Applicable to 130 series)
	C7796-60018	1	Left Cover (Includes Front Panel Label) (Applicable to 110+ series)
	Q6655-60091	1	Left Cover (Includes Front Panel Label) (Applicable to 70)
	C7791-60300	1	Left Cover (Includes Front Panel Label) (Applicable to 90 series)
	CQ532–67016	1	Left Cover (Includes Front Panel Label) (Applicable to 111)
2	Q1292-60271	1	Right Cover (Applicable to 90 series, 130 series)
	C7796-60064	1	Right Cover (Applicable to 70, 110+ series)
	CQ532–67004	1	Right Cover CAD W/ Win Label S (Applicable to 111)
3	Q1292-67009	1	Filter Assembly
4	Q1292-60258	1	Back Cover (Center Cover) (Applicable to 130 series)
	C7796-60223	1	Back Cover (Applicable to 110+ series)
	Q6655-60153	1	Back Cover (Applicable to 70)
	Q6656-60108	1	Back Cover (Applicable to 90 series)
	CQ532–67001	1	Back Cover (Applicable to 111)
5	Q1292-67022	1	Door Sensor Assembly
6	Q6655-60093	1	Ink Cartridge Door (Applicable to 70)
	Q6656-60064	1	Ink Cartridge Door (Applicable to 90)
	Q6656-60079	1	Ink Cartridge Door (Applicable to 90r)
	C7791-60294	1	Ink Cartridge Door (Applicable to 130, 130r)
	C7791-60295	1	Ink Cartridge Door (Applicable to130nr)
	C7796-60094	1	Ink Cartridge Door (Applicable to100+)
	C7796-60095	1	Ink Cartridge Door (Applicable to 110+, 110r)
	C7796-60106	1	Ink Cartridge Door (Applicable to 110+nr)
	CQ532–67005	1	Ink Cartridge Door (Applicable to 111)
7	C7790-60457	1	Printhead Door Assembly (includes Ink Cartridge Door Hinge and Printhead Door Label) (Applicable to 90 series, 130 series)
	C7796-60021	1	Printhead Door Assembly (includes Ink Cartridge Door Hinge and Printhead Door Label) (Applicable to 70, 110+ series, 111)
8	C7791-60277	1	Access Door Assembly (Applicable to 130 series)
	C7796-60020	1	Access Door Assembly (Applicable to 110+ series)
	Q6655-60094	1	Access Door Assembly (Applicable to 70)
	Q6656-60065	1	Access Door Assembly (Applicable to 90 series)
	CQ532–67002	1	Access Door Assembly (Applicable to 111)

9	C7796-67002	1	Rear Trim Kit (Applicable to 70, 90 series, 110+ series, 130 series)
	CQ532–67008	1	Rear Trim Kit (Applicable 111)

Figure 6-2 Cover Assemblies

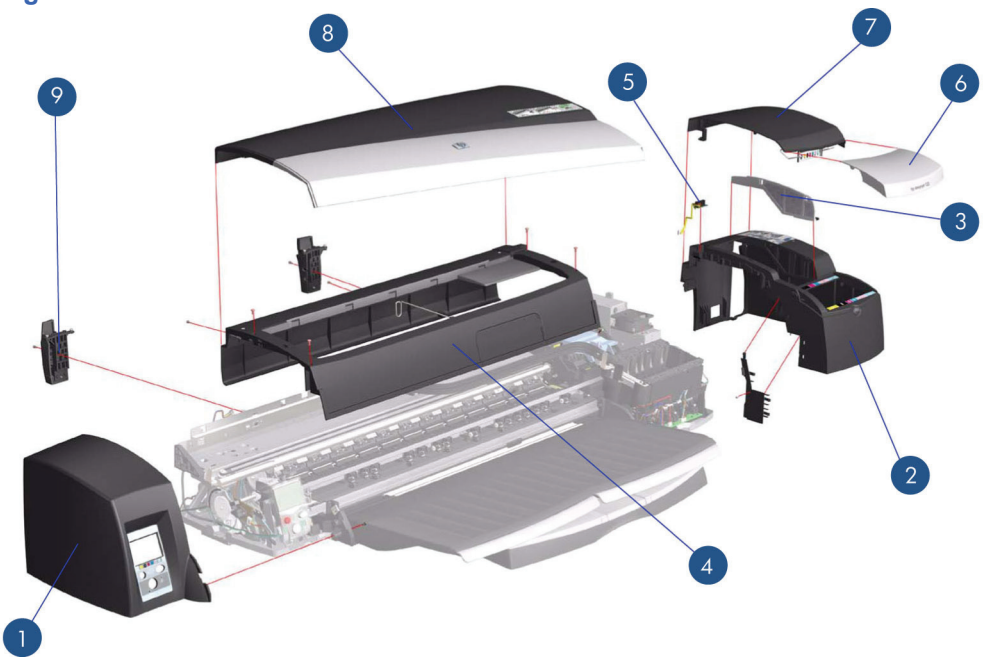

Printer Labels

Printer Labels			
Reference on Drawing	**HP Part Number**	**Quantity**	**Description/Comments**
1	C7790-60450	1	Printhead Access Instructions Label (Applicable to 30 series, 90 series, 130 series)
	C7796-60041	1	Printhead Access Instructions Label (Applicable to 70, 110+ series, 111)
2	C8109-67002		Ink Cartridge Color Label (Applicable to 70, 110+ series, 111)
	C7790-60201		Ink Cartridge Color Label (Applicable to 30 series, 90 series, 130 series)
3	C7790-60449	1	Ink Cartridge Family Label (Applicable to 30 series, 90 series, 130 series)
	C8109-67003	1	Ink Cartridge Family Label (Applicable to 70, 100+ series)
4	Q6655-60096	1	Front Panel Label (Applicable to 70)
	C7790-60451	1	Front Panel Label (Applicable to 30 series, 130 series)
	C7796-60042	1	Front Panel Label (Applicable to 110+ series)
	CQ532–67003	1	Front Panel (Applicable 111)
	C7791-60228	1	Load Rollfeed Label (Applicable to 90r, 130nr, 110+, 110 +nr, 120nr, 130nr)

Figure 6-3 Printer Labels

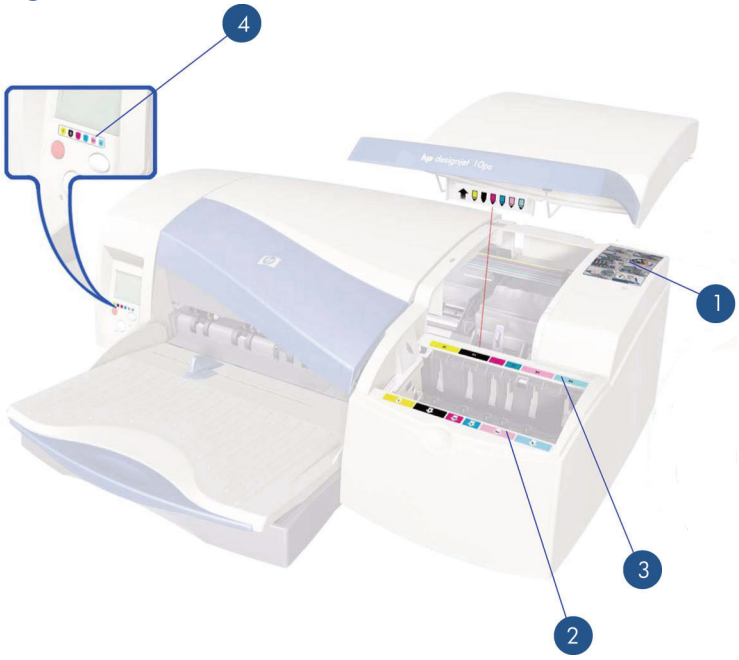

Right Hand Assemblies

Right Hand Assemblies			
Reference	**HP Part Number**	**Quantity**	**Description/Comments**
1	Q1293-60049	1	Ink Supply Station Assembly (Applicable to 30 series, 90 series, 130 series)
	C7796-60209		Ink Supply Station Assembly (Applicable to 70, 110+ series)
	CQ532–67007	1	Ink Supply Station Assembly (Applicable to 111)
2	Q1292-67007	1	ISS Bottom Foam (Applicable to 30 series, 90 series, 130 series)
	C8109-67022	1	ISS Bottom Foam (Applicable to 70, 110+ series, 111)
3	C7796-67001	1	ISS Rear Foam (Applicable to 70, 110+ series)
	Q1292-67011	1	ISS Rear Foam (Applicable to 30 series, 90 series, 130 series)
4	Q1293-67006	1	Electronics Module Assembly (Applicable to 30 series)
	Q6655-60166		Electronics Module Assembly (Applicable to 70)
	Q6656-69116	1	Electronics Module Assembly (Applicable to 90 series)
	Q1292-67034	1	Electronics Module Assembly (Applicable to 130 series)
	C7796-69156	1	Electronics Module Assembly (Applicable to 110+ series)
	CQ532–67006	1	Electronics Module Assembly (Applicable to 111)
5	Q1292-67033	1	Power Supply Unit
6	Q1293-60052	1	Service Station Assembly (Applicable to 30 series)
	Q1292-60206	1	Service Station Assembly (Applicable to 90 series, 130 series)
	C7796-60203	1	Service Station Assembly (Applicable to 70, 110+ series, 111)

7	C8108-67031	1	Cleanout Interconnect PCA (Applicable to 30 series)
	Q1292-67020	1	Cleanout Interconnect PCA (Applicable to 70, 90 series, 130 series, 110+ series, 111)

Figure 6-4 Right Hand Assemblies

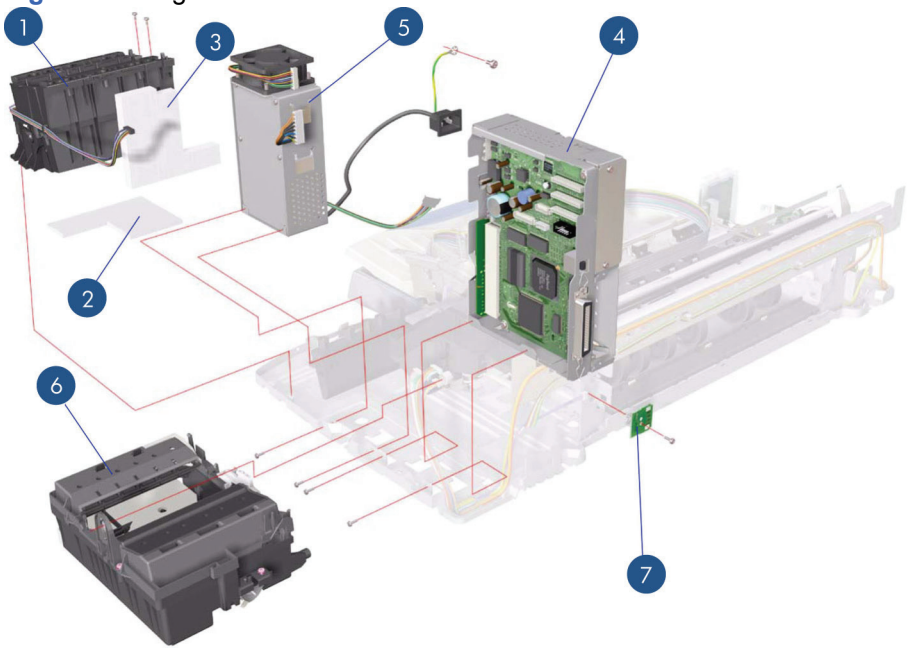

Left Hand Assemblies

Left Hand Assemblies			
Reference on Drawing	**Part number**	**Quantity**	**Description/Comments**
1	Q1292-67021	1	Front Panel Assembly (Includes Front Panel Cable) (Applicable to 30 series, 70, 90 series, 130 series Printer)
	C7796-67004	1	Front Panel Assembly (Includes Front Panel Cable) (Applicable to 110+ series)
	CQ532–67009	1	Front Panel Assembly (Applicable to 111)
2	Q1292-60218	1	LF Motor Assembly (Paper-Axis Motor)
3	Q1292-60219	1	Ramp Drive Assembly
4	Q1293-60068	1	Output Mechanism Support Assembly
5	Q1292-67019	1	Encoder Disc
7	Q1292-60207	1	Carriage Motor Assembly
8	Q1292-67001	1	Output Belt

Figure 6-5 Left Hand Assemblies

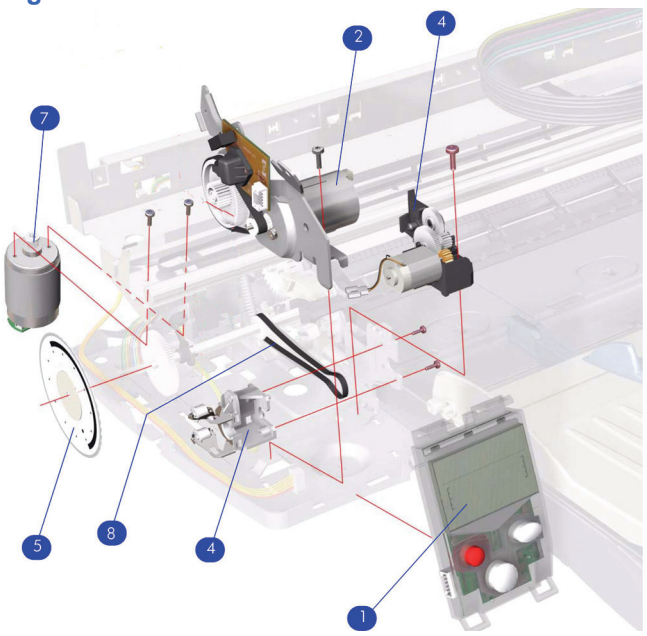

Scan-Axis Assemblies

Scan-Axis Assemblies			
Reference on Drawing	**HP Part Number**	**Quantity**	**Description/Comments**
1	Q1293-60046	1	Carriage Assembly (Includes Trailing Cable) (Applicable to 30 series)
	Q1292-60202	1	Carriage Assembly (Includes Trailing Cable) (Applicable to 130 series)
	Q6655-60121	1	Carriage Assembly (Includes Trailing Cable) (Applicable to 70)
	Q6656-60094	1	Carriage Assembly (Includes Trailing Cable) (Applicable to 90 series)
	C7796-60205	1	Carriage Assembly (Includes Trailing Cable) (Applicable to 110+ series, 111)
2	Q1293-60065	1	Tubes Assembly (Applicable to 30 series)
	Q6655-60140	1	Tubes Assembly (Applicable to 70)
	Q6656-60103	1	Tubes Assembly (Applicable to 90 series)
	Q1292-60235	1	Tubes Assembly (Applicable to 130 series)
	C7796-60219	1	Tubes Assembly (Applicable to 110+ series, 111)
3	Q1293-67005	1	Carriage Belt (Applicable to 30 series)
	Q6655-67007	1	Carriage Belt (Applicable to 70, 90 series)
	Q1292-67026	1	Carriage Belt (Applicable to 110+ series, series, 130 series, 111)
4	Q6655-67006	1	En coder Strip (Applicable to 70, 90 series)
	Q1292-67003	1	Encoder Strip (Applicable to 110+ series, 130 series)
5	Q1292-60152	1	Encoder Strip Holder
6	Q1292-67005	1	Tube Holder
7	Q1292-67006	1	Belt Tension Spring
8	Q1293-67810	1	Carriage Rod (Applicable to 30 series)

-	C7790-60216	1	Turnaround Assembly (Applicable to 30 series)
-	C7791-60212	1	Turnaround Assembly (Applicable to 70, 90 series, 110 + series, 130 series)

Figure 6-6 Scan-Axis Assemblies

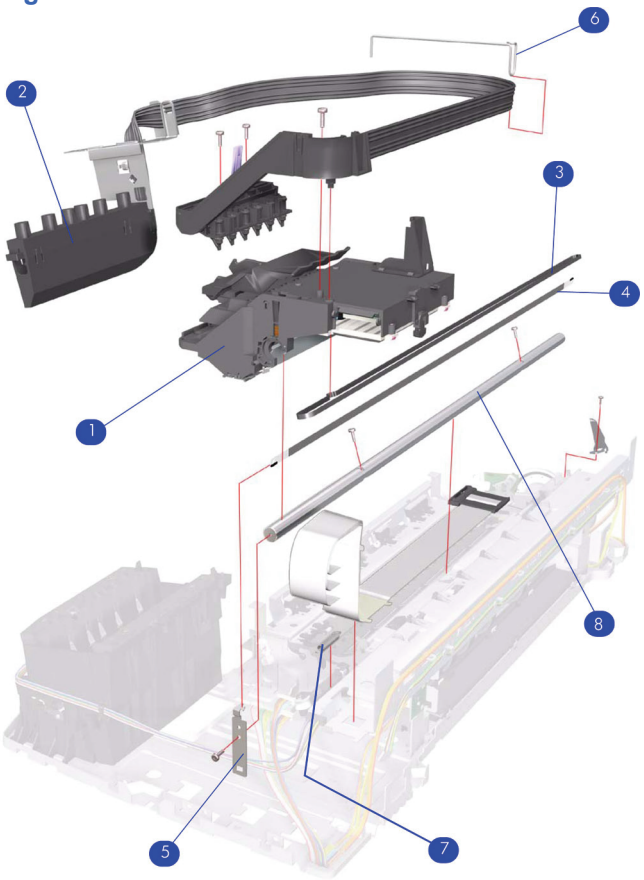

Top Paper Path Assemblies (1 of 2)

Applicable Designjets: 30 series

Top Paper Path Assemblies			
Reference on Drawing	**HP Part Number**	**Quantity**	**Description/Comments**
1	C8108-67049	1	Inner Paper Guide
2	C8108-67043	1	Lower Paper Guide
3	Q1293-67809	1	Feed Roller Assembly (Includes Encoder Disc)
4	C8108-67035	1	Pin Linkage Assembly
5	C8108-67033	1	Starwheel Assembly
6	C8108-67041	1	Print Platen (Includes Output Separator)
7	C8108-67039	1	Pick Roller Assembly
8	C8108-67029	1	Kicker Assembly
-	C8108-67030	1	Miscellaneous Plastic Parts (includes Plift Block, Pin Caber, Pick Cam, FDRLR Idler Gear)
-	Q1292-60150	1	OPP Sensor Kit

Figure 6-7 Top Paper Path Assemblies

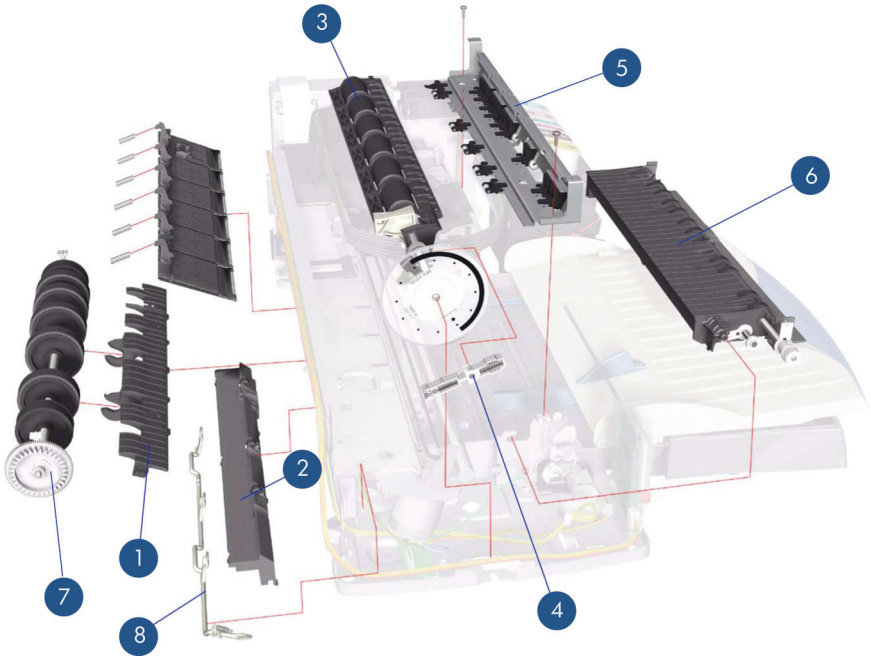

Top Paper Path Assemblies (2 of 2)

Applicable Designjets: 70, 90 series, 110+ series, 130 series

Top Paper Path Assemblies			
Reference on Drawing	**HP Part Number**	**Quantity**	**Description/Comments**
1	Q1292-60150	1	OPP Sensor Kit
2	Q6655-60122	1	Feed Roller Assembly (Includes Encoder Disc and Paper Axis Motor Assembly) (Applicable to 70, 90 series)
	Q1292-60211	1	Feed Roller Assembly (Includes Encoder Disc and Paper Axis Motor Assembly) (Applicable to 110+ series, 130 series, 111)
3	Q6655-60082	1	Starwheel Assembly (Applicable to 70, 90 series)
	C7791-60245	1	Starwheel Assembly (Applicable to 110+ series, 130 series, 111)
4	Q6655-60139	1	Print Platen (Applicable to 70, 90 series)
	Q1292-60227	1	Print Platen (Applicable to 110+ series, 130 series, 111)
5	C7791-60287	1	Bypass Platen Kit (Applicable to 110+ series, 130 series, 111)
	Q6655-60074	1	Bypass Platen Kit (Applicable to 70, 90 series)
6	C7796-60217	1	Pivot Assembly (Applicable to 110+ series, 130 series, 111)
	Q6656-60102	1	Pivot Assembly (Applicable to 70, 90 series)
7	Q1292-67017	1	Pick Cam (Applicable to 70, 90 series, 110+ series, 130 series, 111)

8	C7791-60307	1	Bypass Platen Actuator & Spring (Applicable to 110 + series, 130 series, 111)
	Q6655-67005	1	Bypass Platen Actuator & Spring (Applicable to 70, 90 series)
-	C8108-67030	1	Misc Plastic Parts (includes Plift Block, Pin Caber, Pick Cam, FDRLR Idler Gear)

Figure 6-8 Top Paper Path Assemblies

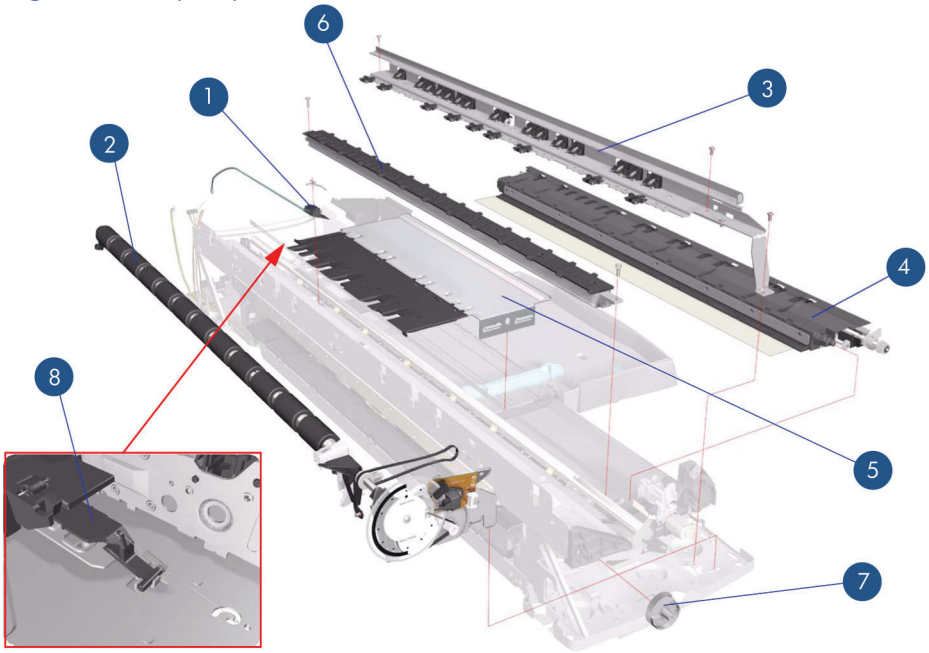

Rear Paper Path Assemblies

Rear Paper Path Assemblies			
Reference on Drawing	**HP Part Number**	**Quantity**	**Description/Comments**
1	Q6655-67001	1	Inner Paper Guide (Applicable to 70, 90 series)
	Q1292-67023	1	Inner Paper Guide (Applicable to 110+ series, 130 series, 111)
2	Q1292-60210	1	Pick Roller Assembly (Applicable to 110+ series, 130 series, 111)
	Q6655-60123	1	Pick Roller Assembly (Applicable only to 70, 90 series)
3	Q1292-67015	1	Upper Roller Kit
4	Q1292-67018	1	Lower Paper Guide Bits

Figure 6-9 Rear Paper Path Assemblies

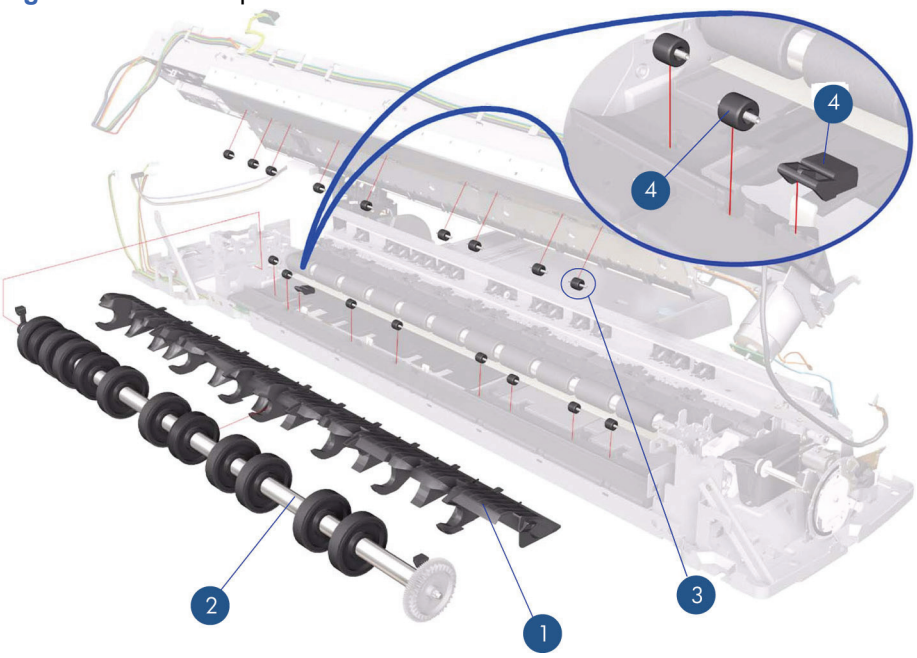

Paper Feed Assemblies

Paper Feed Assemblies			
Reference on Drawing	**HP Part Number**	**Quantity**	**Description/Comments**
1	C8108-67044	1	Main Tray Assembly (Applicable to 30 series)
	Q1292-60097	1	Main Tray Assembly (Applicable to 70, 90, series, 110+ series, 130 series)
	CQ532–67015	1	Main Tray Assembly (Applicable to 111. with Tray)
2	C7790-60448	1	Output Tray Assembly (Applicable to 30 series)
	Q6655-60101	1	Output Tray Assembly (Applicable to 70)
	Q6656-60072	1	Output Tray Assembly (Applicable to 90, series)
	C7791-60280	1	Output Tray Assembly (Applicable to 130 series)
	C7796-60063	1	Output Tray Assembly (Applicable to 110+ series)
	CQ532–67018	1	Output Tray Assembly (Applicable to 111, With Tray)
3	C8108-67050	1	Drawer and Spring Cam
4	Q1293-60067	1	Cleanout Assembly (Rear-Feed) (Applicable to 30 series)
	Q1292-60283	1	Cleanout Assembly (Rear-Feed) (Applicable to 110 + series, 130 series)
	Q6655-60159	1	Cleanout Assembly (Rear-Feed) (Applicable to 70, 90 series)
	CQ532–67011	1	Cleanout Assembly (Applicable to 111)

5	C7791-60297	1	Input tray Cover (Applicable to 70, 90 series, 110+ series, 130 series), 111 With Tray)
6	CQ532–67013	1	Output Platen (Applicable to 111, with Roll)

Figure 6-10 Paper Feed Assemblies

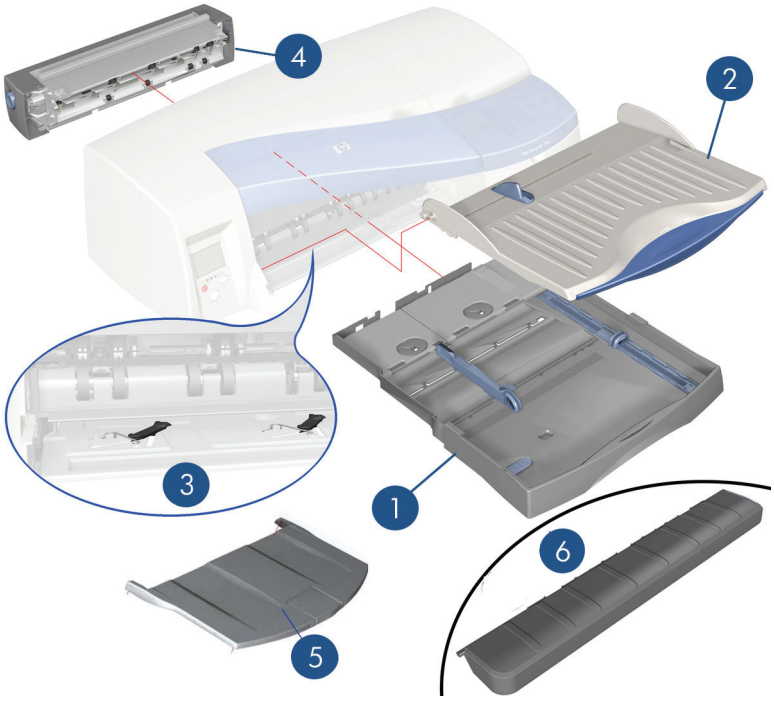

Cable Harnesses

Cable Harnesses			
Reference on Drawing	**HP Part Number**	**Quantity**	**Description/Comments**
1	Q1292-67029	1	Motor Harness (All products)
2	Q1293-67002	1	Encoder Harness (Applicable to 30 series)
	Q1292-67014	1	Encoder Harness (Applicable to 70, 90, seris, 110+ series, 130 series, 111)
3	Q1292-67016	1	Duplexer OOPS Harness (Applicable to 70, 90 series, 110+ series, 130 series, 111)
–	Q1292-67010	1	Front Panel Harness

Figure 6-11 Cable Harness

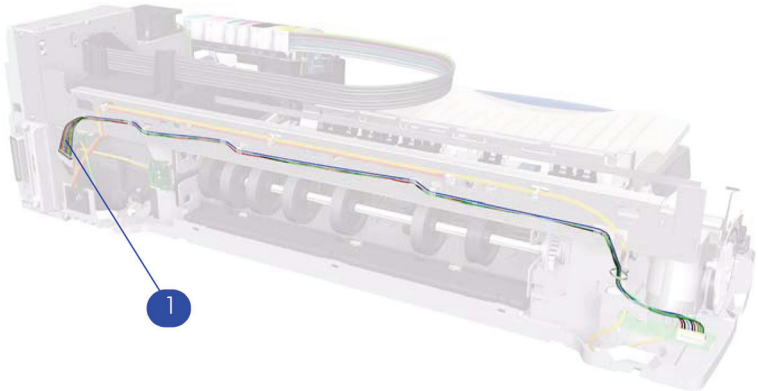

Figure 6-12 Cable Harness

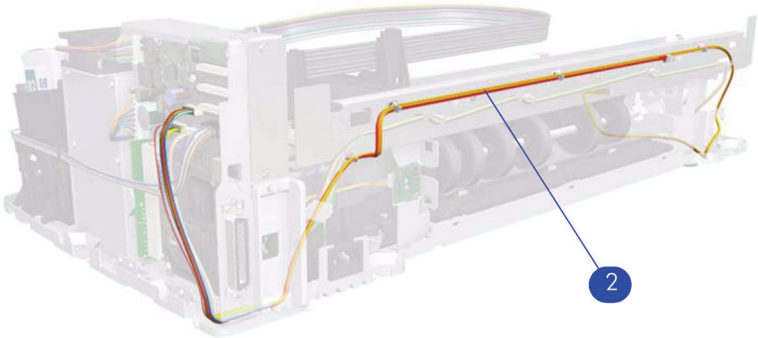

Figure 6-13 Cable Harness

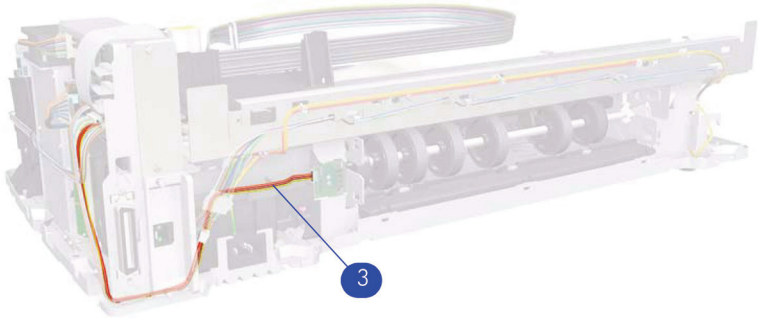

Ink Supplies and Accessories (1 of 2)

Applicable to Designjets: 110+ series, 70, 111

Ink Supplies and Accessories			
Reference on Drawing	**HP Part Number**	**Quantity**	**Description/Comments**
1	J7934-69011	1	Network Card
2	C4810-60066	1	Black Printhead
	C4810-60067	1	Cyan Printhead
	C4812-60005	1	Magenta Printhead
	C4813-60004	1	Yellow Printhead
3	C4844-60053	1	Black Ink Cartridge (Applicable to 70, 110+ series)
	CH565A	1	Black Ink Cartridge (Applicable to 111)
	C4911-61002	1	Cyan Ink Cartridge
	C4912-61003	1	Magenta Ink Cartridge
	C4913-61003	1	Yellow Ink Cartridge
4	Q1292-67008	1	Electronics End Cap
-	C7790-60425	1	USB Cable (5m)

Figure 6-14 Ink Supplies and Accessories

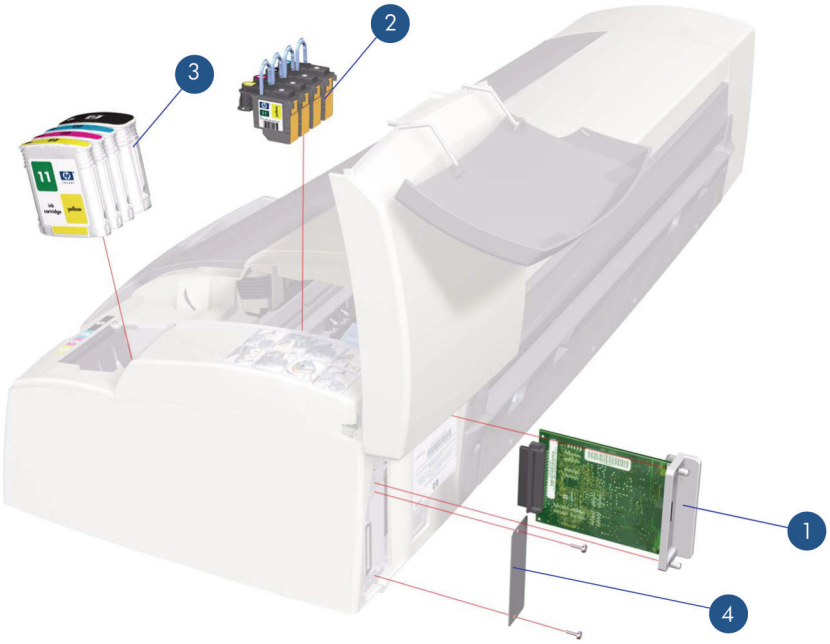

Ink Supplies & Accessories (2 of 2)

Applicable to Designjets: 30 series, 90 series, 130 series

Ink Supplies and Accessories			
Reference on Drawing	**HP Part Number**	**Quantity**	**Description/Comments**
1	J7934-69011	1	Network Card (Replacement)
2	C5019-80008	1	Black Printhead
	C9420-88001	1	Cyan Printhead
	C9421-88001	1	Magenta Printhead
	C9422-88001	1	Yellow Printhead
	C9423-88001	1	Light Cyan Printhead
	C9424-88001	1	Light Magenta Printhead
3	C5016-80014	1	Black Ink Cartridge
	C9425-88001	1	Cyan Ink Cartridge
	C9426-88001	1	Magenta Ink Cartridge
	C9427-88001	1	Yellow Ink Cartridge
	C9428-88001	1	Light Cyan Ink Cartridge
	C9429-88001	1	Light Magenta Ink Cartridge
4	C7790-60217	1	Electronics End Cap
-	C7790-60425	1	1 USB Cable (5m)

Figure 6-15 Ink Supplies & Accessories

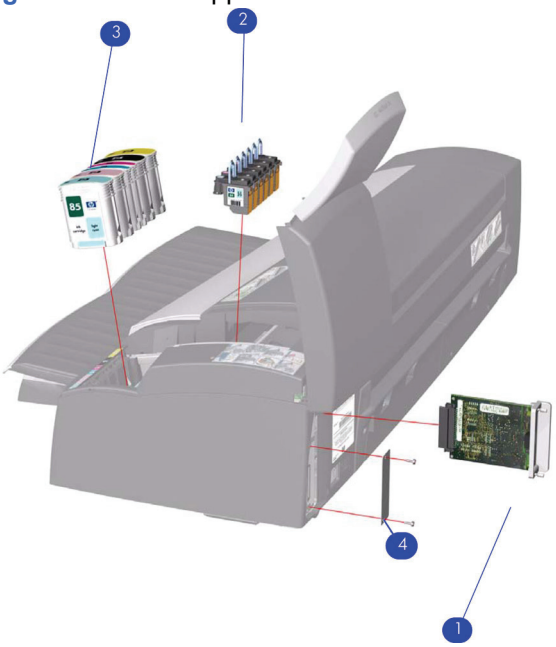

Rollfeed Components

Applicable to Designjets: 90r, 110+, 110+nr, 130nr, 111 with roll, 110+r, 130r, or as an accessory

Rollfeed Components			
Reference on Drawing	**HP Part Number**	**Qty**	**Parts Description**
1	CQ532–67017	1	Rollfeed Right Bracket (Applicable to 111)
	C7791-60153	1	Rollfeed Right Bracket (Applicable to 130nr, 130r, 110plus nr, 110plus r)(without motor)
	Q1292-60238	1	Rollfeed Left & Right Bracket Kit (ROHS)
2	Q1292-60064	1	Cutter
3	C7797-60008	1	Spindle (130, 111, 110r, 110+
	Q6655-60081	1	Spindle (Applicable only to 70, 90, 90r)
4	Q6655-60159	1	Service cleanout C-Size packed (Applicable to 70, 90, 90r)
	CQ532–67011	1	Clean Out (Applicable to 111)
	Q1292–60283	1	CleanOut Manual Rollfeed (Applicable to 100+, 110plus, 130)
	Q1247-60189	1	Automatic Rollfeed Switching System Cleanout (Applicable to 100, 110plus, 130)
5	Q1247-60187	1	Automatic Rollfeed Switching System bracket (Applicable to 100+nr, 130nr)
6	CQ532–67019	1	Rollfeed Left Bracket Kit (applicable 111)

Figure 6-16 Rollfeed Components

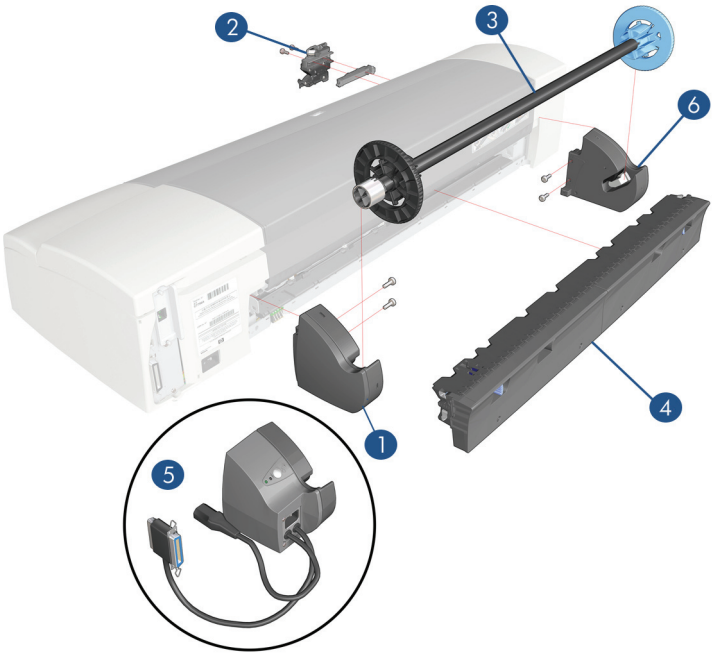

Printer Stand and Basket

Applicable Designjet 100+ series, 130 series

Printer Stand and Basket			
Reference on Drawing	**HP Part Number**	**Quantity**	
1	Q1246-60007	2	Legs Assembly
2	Q1246-60008	1	X-Brace Assembly
3	Q1246-60009	2	Foot Assembly
4	Q1246-60010	1	Basket Kit
5	Q1246-60011	1	Base Adaptor (Left and Right)
6	Q1246-60012	1	Input Tray Support
-	Q1246-60013	1	Hardware Kit

Figure 6-17 Printer Stand and Basket

7 Removal and Installation

- Introduction
- Top Cover
- Front Cover (Applicability: 30, 30n, 50ps)
- Center Cover
- Right End Cover
- Left End Cover
- Ink Supply Station Cover (Applicability: 70, 100, 100plus, 110plus, 111)
- Ink Supply Station
- Electronics Module
- Power Supply Unit
- Service Station
- Front Panel
- Encoder Strip
- Carriage Motor
- Cleanout Assembly
- Ink Supply Tubes
- Carriage Assembly (Applicability: 70, 100+, 110+, 111)
- Carriage Assembly (Applicability: 30, 30nr, 90, 90r, 130, 130nr)
- Carriage Belt
- Starwheel Assembly (Applicability: 30, 30n)
- Starwheel Assembly
- Print Platen Assembly
- Output Separator (Applicability: 30, 30n)
- Ramp Motor Assembly
- Output Mechanism Assembly (Applicability: 30, 30n)
- Spittoon (If Installed in the Printer)
- Pivot Assembly

- Feed Roller Assembly (Applicability: 30, 30n)
- Feed Roller Assembly
- Pick Assembly (Applicability: 30, 30n)
- Pick Assembly
- Pinch Assembly (Applicability: 30, 30n)
- Lower Paper Guide (Applicability: 30, 30n)
- Inner Paper Guide (Applicability: 30, 30n)
- Inner Paper Guide
- OOPS Sensor
- Paper-Axis Motor Drive Assembly (Applicable only to 30, 30n)
- Paper-Axis Motor Assembly (Applicability: 90, 90r, 130, 130nr)
- Bypass Platen (Applicability: 90, 90r, 130, 130nr)
- Bypass Platen Actuator (Applicability: 90, 90r, 130, 130nr)
- Output Platen (HP Designjet 111 with Roll)

Introduction

This chapter is a step by step guide to the removal and installation of the key components in the printer. You may find it useful to tick off the steps as they are performed. Use the illustration at each procedure to identify the parts referred to in the text. The procedures appear in order of removal. So the whole machine can be stripped down by starting at the beginning of this chapter and working through the subsequent procedures.

NOTE: Before using this chapter to remove and install a new component, always make sure that you have performed the relevant service test from Chapter 4 titled Utilities on page 53. If the test passes you will not need to replace the component.

Safety Precautions

Review WARNING and CAUTION symbols and instructions before you service the printer. Follow these warnings and cautions for your protection and to avoid damaging the printer.

NOTE: Serious shock hazard leading to death or injury may result if you do not take the following precautions:

Ensure that the ac power outlet (mains) has a protective earth (ground) terminal.

Switch the plotter off, and disconnect it from the power source prior to performing any maintenance.

Prevent water or other liquids from running onto electrical components or circuits, or through openings in the module.

Electrostatic Discharge (ESD) Precautions

To prevent damage to the Printer circuits from high-voltage electrostatic discharge (ESD):

1. Do not wear clothing that is subject to static build-up.
2. Do not handle integrated circuits (ICs) in carpeted areas.

3. Do not remove an IC or a printed circuit assembly (PCA) from its conductive foam pad or conductive packaging until you are ready to install it.
4. Ground (earth) your body while disassembling and working on the Printer.
5. After removing a cover from the Printer, attach an earthing (ground) lead between the PCA common and earth ground. Touch all tools to earth ground to remove static charges before using them on the Printer.
6. After removing any PCA from the Printer, place it on a conductive foam pad or into its conductive packaging to prevent ESD damage to any ICs on the PCA.

Required Tools

The following tools are required to disassemble and repair the Printer.

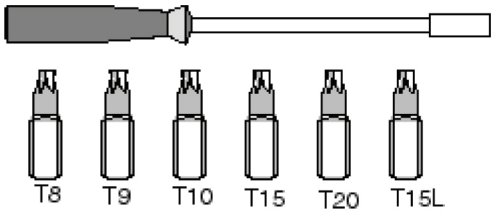

Long Torx Screwdriver with the indicated attachments

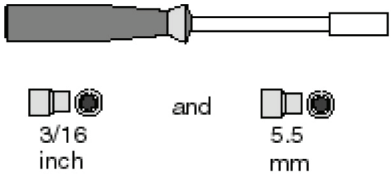

Nut driver with the indicated attachments

Small flat-blade screwdriver

Top Cover

Removal

NOTE: Switch off the product and remove the power cable.

1. Open the Top Cover.

2. Release the clips that secure the Top Cover and remove from the Printer.

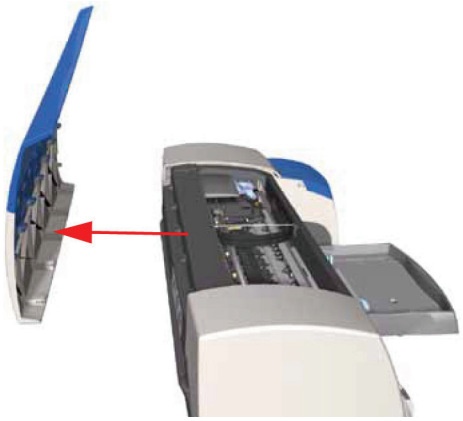

Front Cover (Applicability: 30, 30n, 50ps)

Removal

NOTE: Switch off the product and remove the power cable.

1. Open the Access Cover.

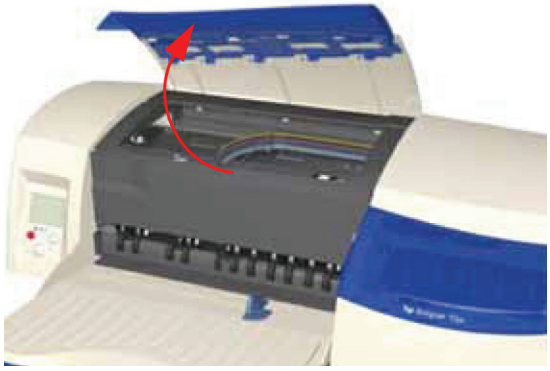

2. Release the clips (from the inside) that secure the Front Cover.

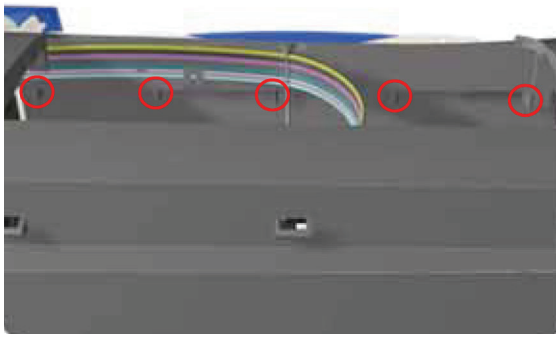

3. Remove the Front Cover from the Printer.

Center Cover

Removal

NOTE: Switch off the product and remove the power cable.

1. Remove the Top Cover Top Cover on page 98.

2. Release the Ink Supply Tubes from the Raceway Holder. Remove the Raceway Holder from the Printer.

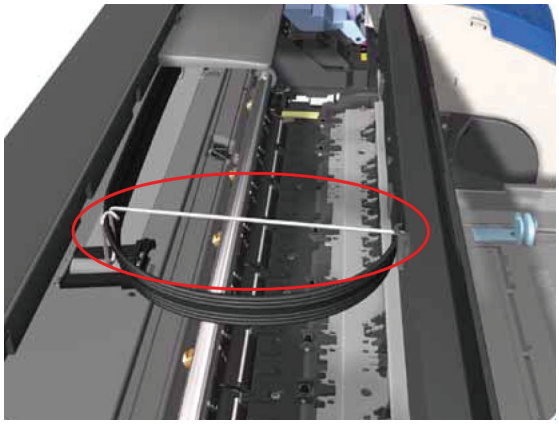

3. Release the Tubes from the retaining clips in the Center Cover.

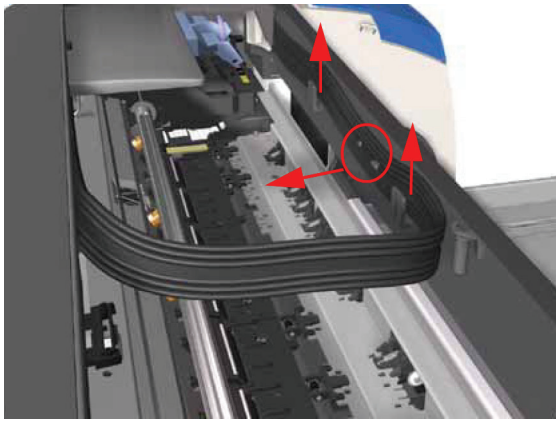

4. Remove four T-10 screws that secure the Center Cover to the Printer.

5. Remove two T-10 screws that secure the Center Cover from the rear.

NOTE: Step 5 not applicable to 10ps,20ps, 30, 30n, 50ps

6. Open the Printhead Door.

7. Remove the Center Cover from the Printer.

Right End Cover

Removal

NOTE: Switch off the product and remove the power cable.

1. Remove the Center Cover Center Cover on page 99.
2. Open the Printhead Door.

3. Release the Door Sensor from the Right End Cover.

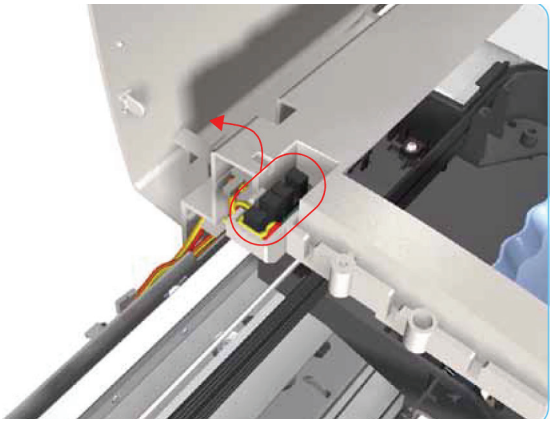

4. Remove one T-10 screw that secures the Right End Cover to the Printer.

5. Remove one T-10 screw from the Right Side Bracket.

NOTE: Step 5 not applicable to 10ps,20ps, 30,30n,50ps

6. Release the clips that secure the Right End Cover to the Printer (use a flat-blade screwdriver if necessary).

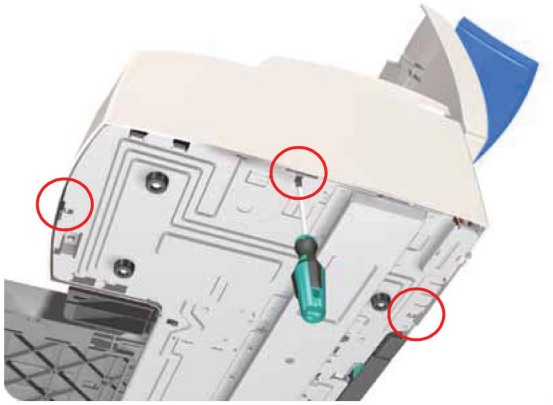

7. Remove the Right End Cover from the Printer.

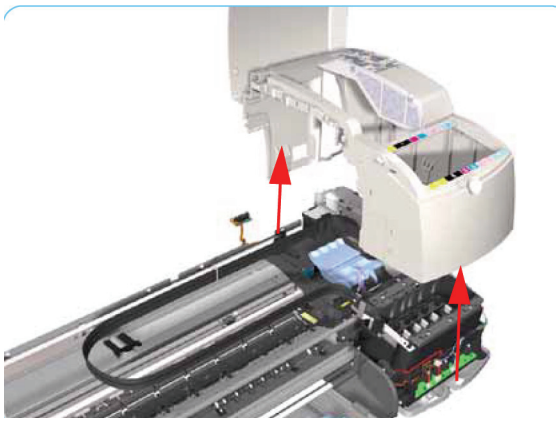

Left End Cover

Removal

NOTE: Switch off the product and remove the power cable.

1. Remove the Center Cover Center Cover on page 99.
2. Disconnect the Front Panel cable from the rear of the Printer.

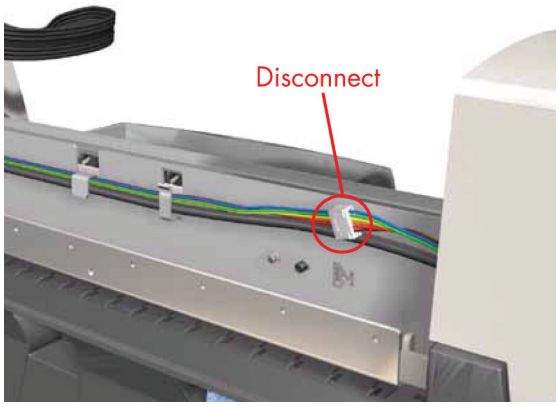

NOTE: Following steps 3, 4 and 5 not applicable to 10ps,20ps, 30, 30n, 50ps

3. Remove one T-10 screw from the Rear Left Trim.

4. Remove the Rear Left Trim from the Printer.

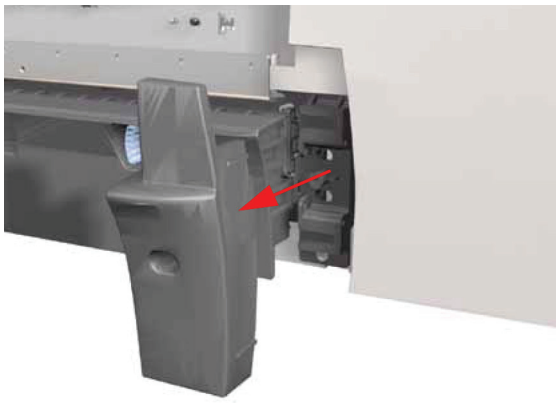

5. Remove one T-10 screw from the Left Side Bracket.

6. Release the clips that secure the Left End Cover to the Printer (use a flat-blade screwdriver if necessary).

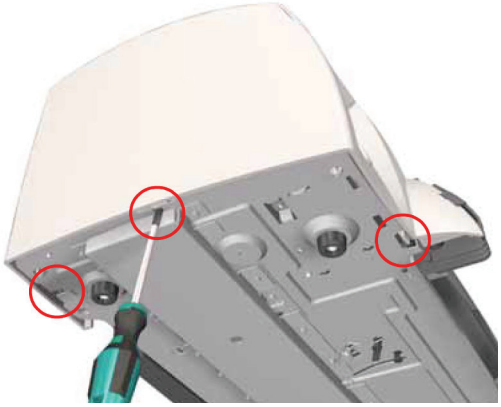

7. Remove the Left End Cover from the Printer.

NOTE: Before installing the Left End Cover, make sure you first check that the Front Panel Cable is routed correctly as shown onFront Panel on page 117.

Ink Supply Station Cover (Applicability: 70, 100, 100plus, 110plus, 111)

Removal

NOTE: Switch off the product and remove the power cable.

1. Remove the Center Cover Center Cover on page 99.
2. Remove the Right End Cover Right End Cover on page 101.

3. Release the Ink Tubs from the clip on the ISS Cover.

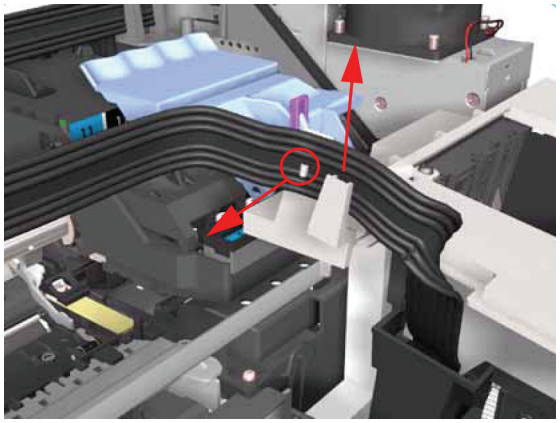

4. Remove two screws that secure the ISS Cover to the Ink Supply Station.

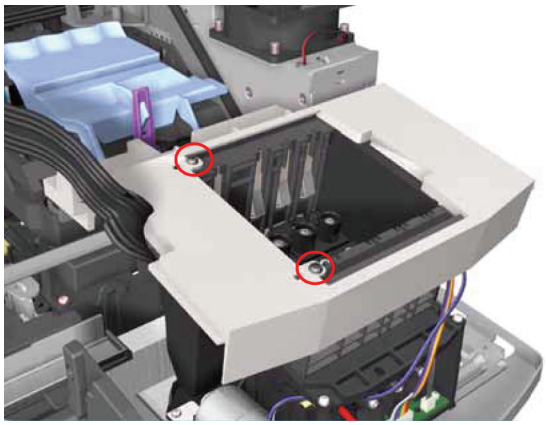

5. Remove the ISS Cover from the Printer.

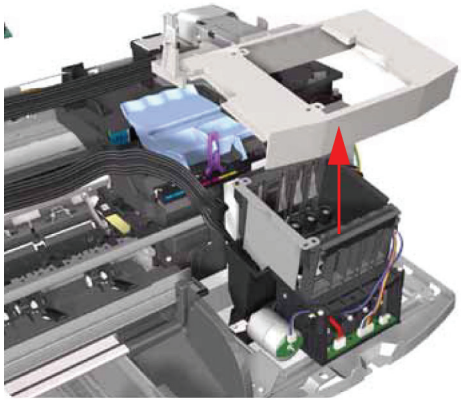

Ink Supply Station

Removal

NOTE: Switch off the product and remove the power cable.

1. Remove the Center Cover Center Cover on page 99.
2. Remove the Right End Cover Right End Cover on page 101.

NOTE: Following step only applicable to Designjet 70, 100, 100+, 110+

3. Remove the ISS Cover ⇒ Ink Supply Station Cover (Applicability: 70, 100, 100plus, 110plus, 111) on page 105.

NOTE: Following step not applicable to Designjet 30, 30n

4. Release the Plastic Cover protecting the Electronics Module.

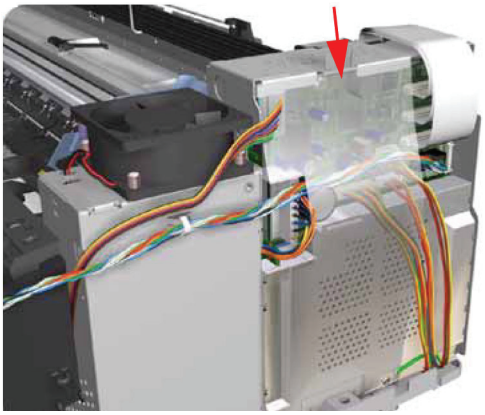

5. Disconnect the Ink Supply Station Cable from the Main PCA.

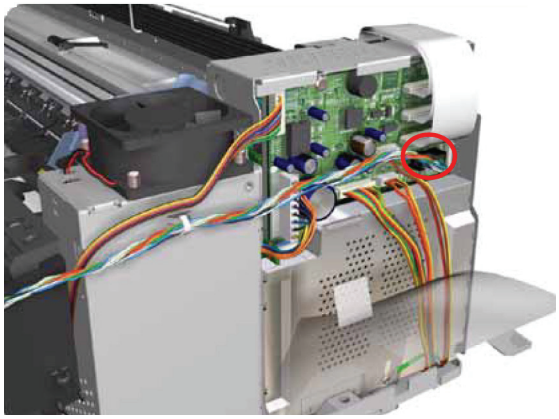

6. Remove one T-10 screw securing the Plastic Cover. Remove the Plastic Cover from the Printer.

NOTE: Step 6 only applicable to 70, 100, 100+, 100+

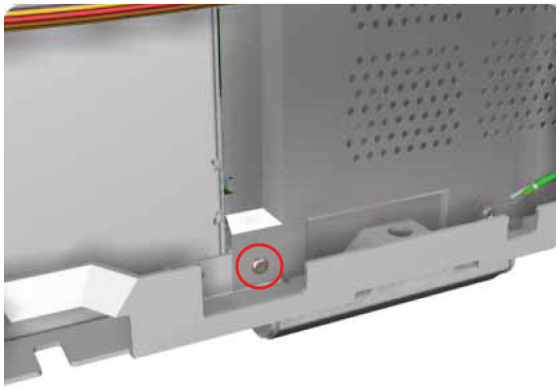

7. Cut the Plastic Tie that secures the Ink Supply Station Cable to the Power Supply Unit.

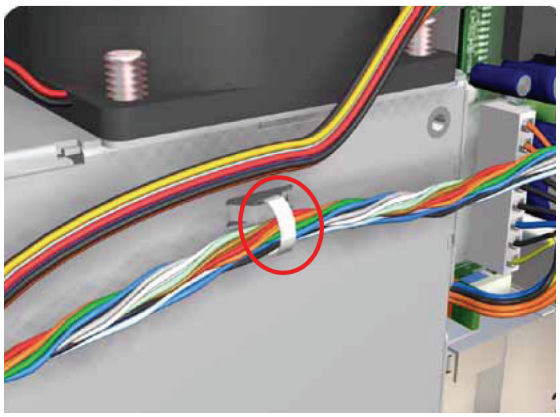

8. Release the Tubes Bracket from the Ink Supply Station by pushing the clips inwards and lifting up the Bracket.

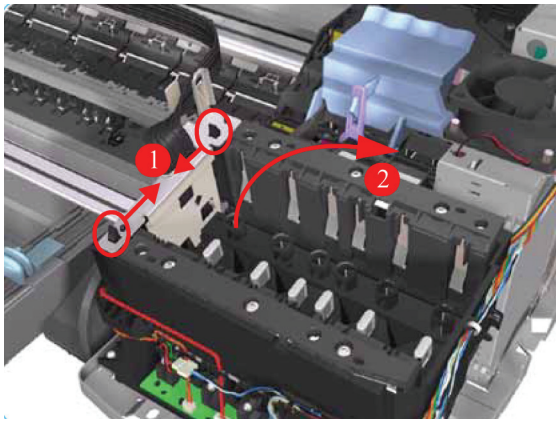

9. Remove two T-10 screws that secure the Ink Supply Station.

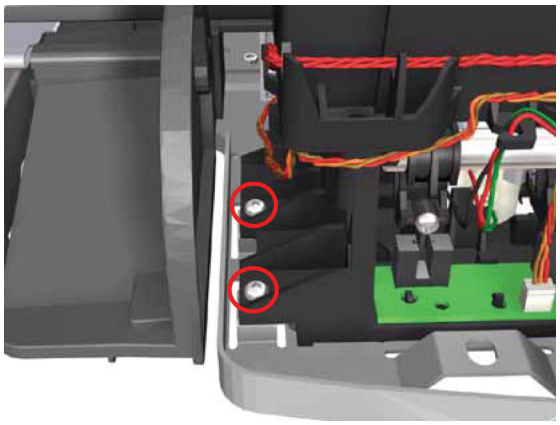

10. Move the Ink Supply Station to the left to release it from the securing clips.

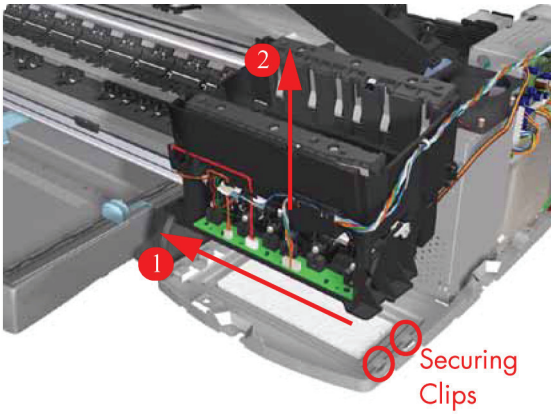

11. Remove the Ink Supply Station from the Printer.

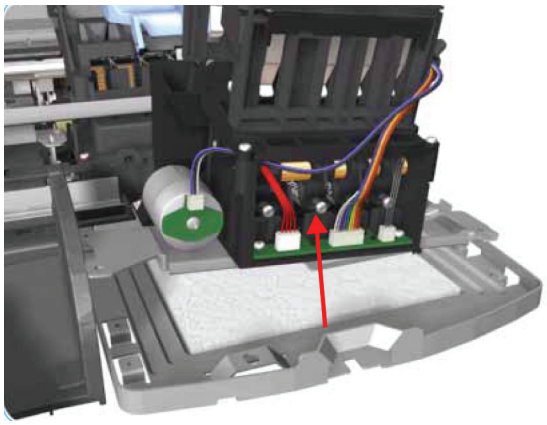

Electronics Module

Removal

NOTE: Switch off the product and remove the power cable.

1. Remove the Center Cover Center Cover on page 99.
2. Remove the Right End Cover Right End Cover on page 101.

   NOTE: Following step not applicable to Designjet 30, 30n.

3. Release the Plastic Cover protecting the Electronics Module.

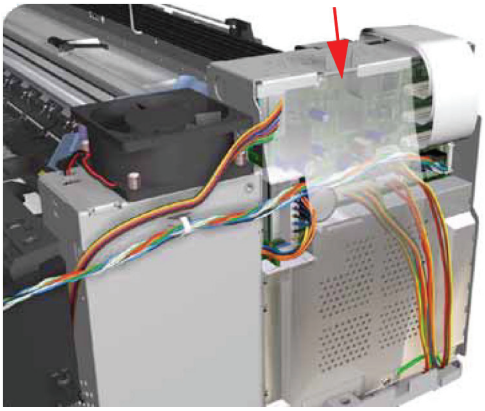

4. Disconnect ALL the cables from the Main PCA.

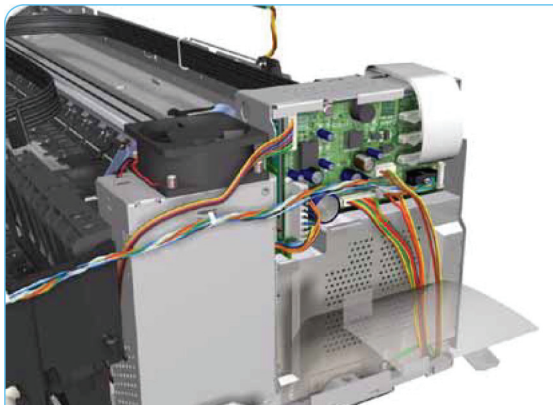

5. Remove three T-10 (**Type B**) screws that secure the Electronics Module and the Power Supply Unit to the Printer.

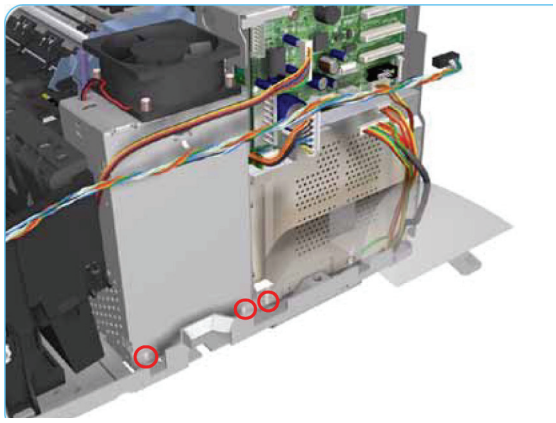

NOTE: Following step not applicable to Designjet 30, 30n.

6. Remove the Plastic Cover from the Printer.

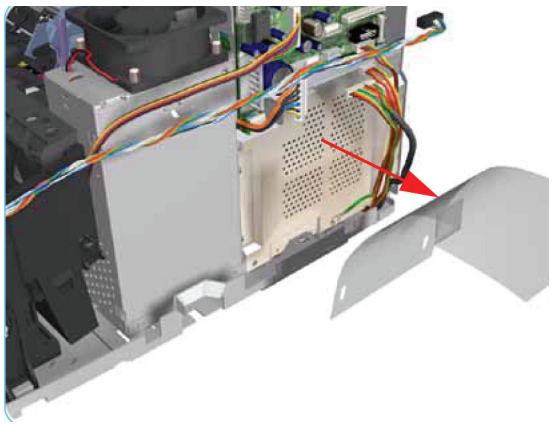

7. Remove one T-10 screw that secures the Electronics Module.

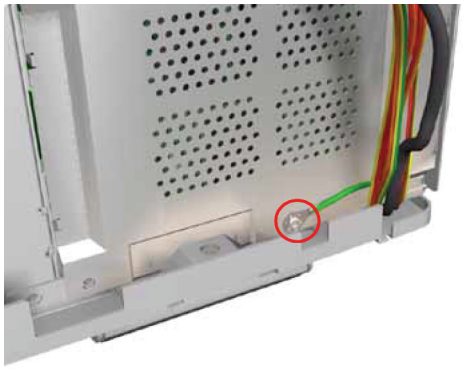

8. Release the plastic sheet that secures the Trailing Cable to the back of the Electronics Module.

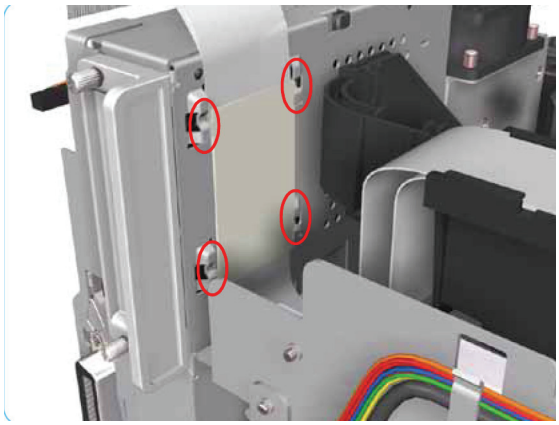

9. Slide out the Electronics Module and the Power Supply Unit (**as one assembly**) to the right.

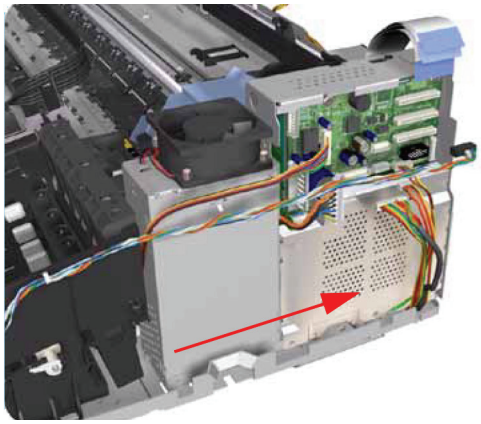

10. Slide the Power Supply Unit upwards to release it from the Electronics Module.

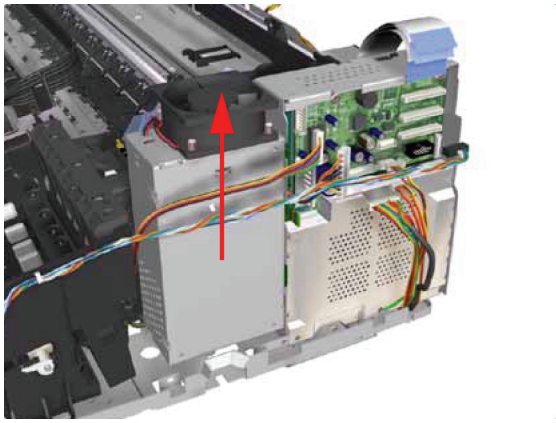

11. Remove the Electronics Module from the Printer.

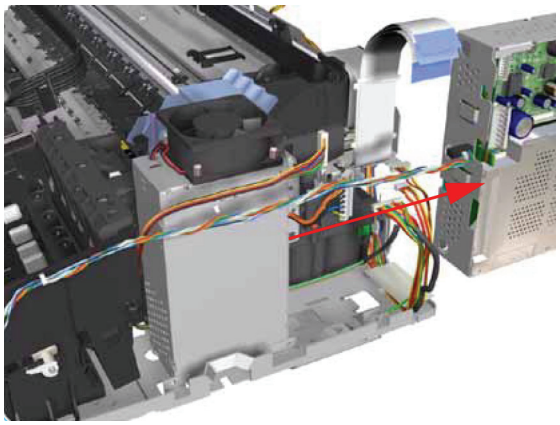

NOTE: Check if the cable ties need to be cut before separating the Power Supply Unit and the Electronics Module.

Power Supply Unit

Removal

NOTE: Switch off the product and remove the power cable.

1. Remove the Center Cover Center Cover on page 99.
2. Remove the Right End Cover Right End Cover on page 101.

3. Remove the Electronics Module ⇒Electronics Module on page 109.

NOTE: Following two steps only applicable to Designjet 30, 30n.

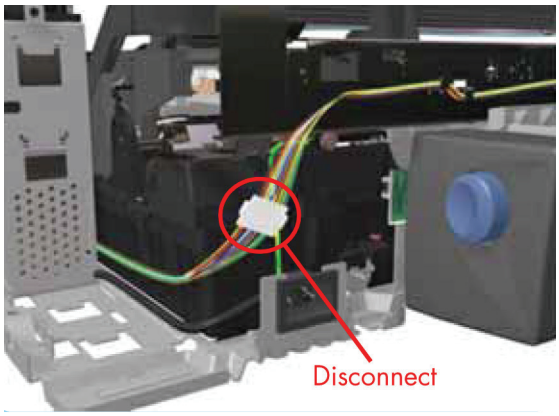

4. Disconnect the Motor Harness Cable.

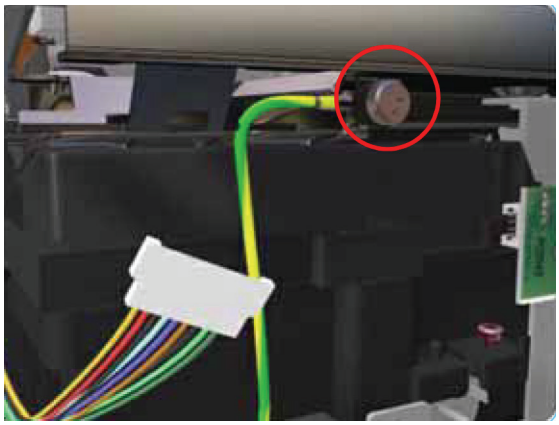

5. Remove one T-10 screw (**Type A**) that secures the Grounding Strip.

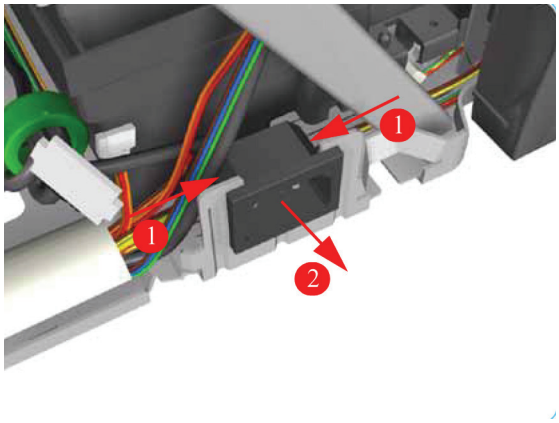

6. Press in the clips on either side and release the Power Socket.

7. Remove the Power Supply from the Printer.

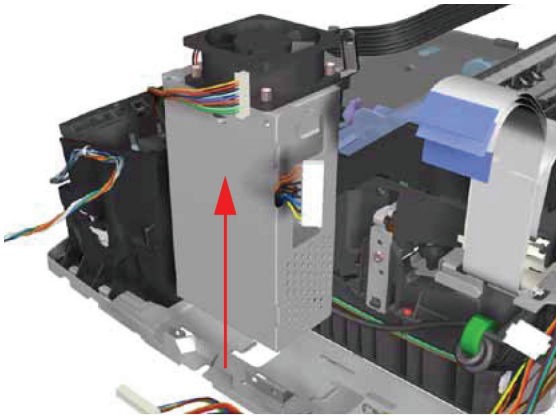

Service Station

Removal

NOTE: Switch off the product and remove the power cable.

1. Remove the Center Cover Center Cover on page 99.
2. Remove the Right End Cover Right End Cover on page 101.
3. Remove the Electronics Module Electronics Module on page 109.
4. Remove the Power Supply Unit Power Supply Unit on page 112.

NOTE: Following step is not applicable to Designjet 30, 30n.

5. Remove two screws that secure the Reinforcement Bracket. Remove the Reinforcement Bracket from the Printer.

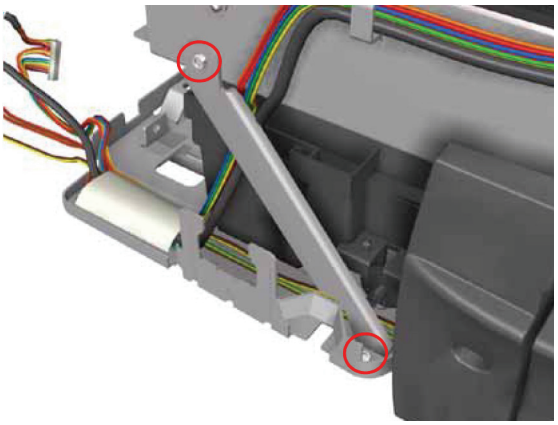

6. Disconnect the Service Station Cable.

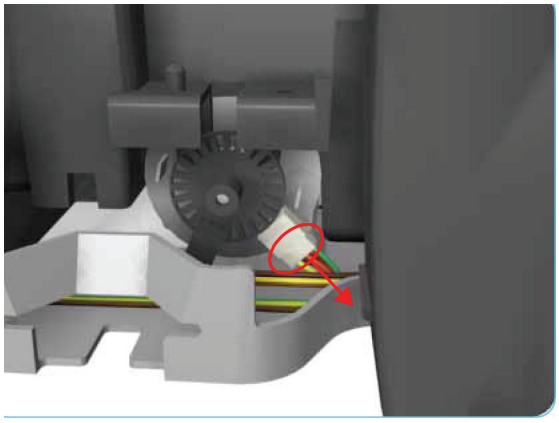

7. Uncap the Carriage Assembly by turning the Service Station Motor clockwise.

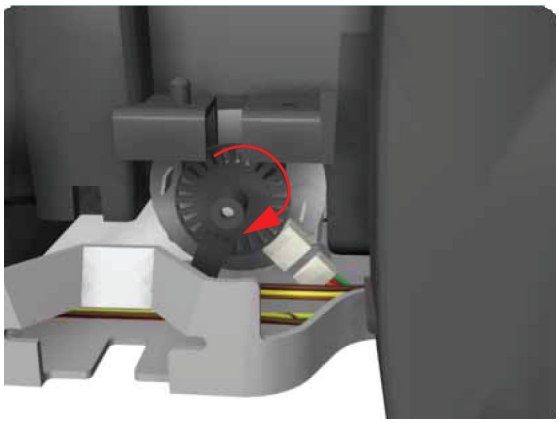

8. Move the Carriage Assembly out of the Service Station.

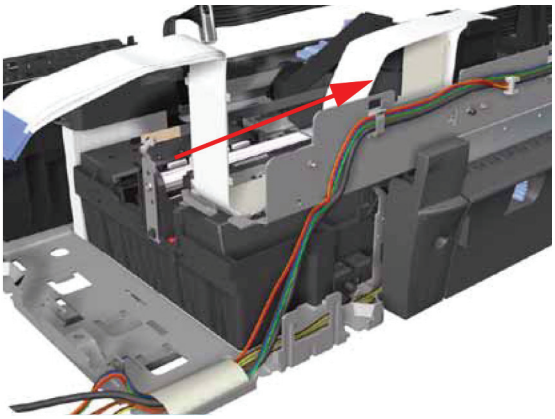

9. Release the Encoder Strip from the Encoder Strip Holder.

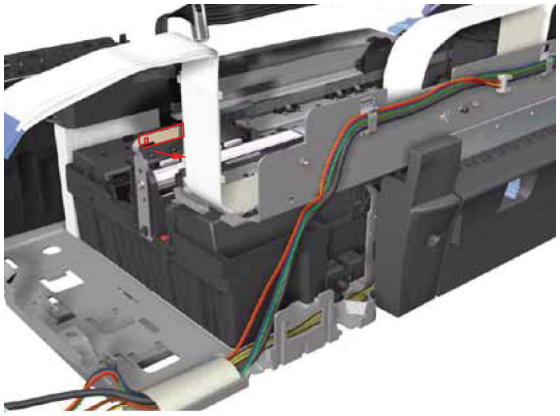

10. Remove one T-10 screw that secures the Encoder Strip Holder on the right hand side of the Printer.

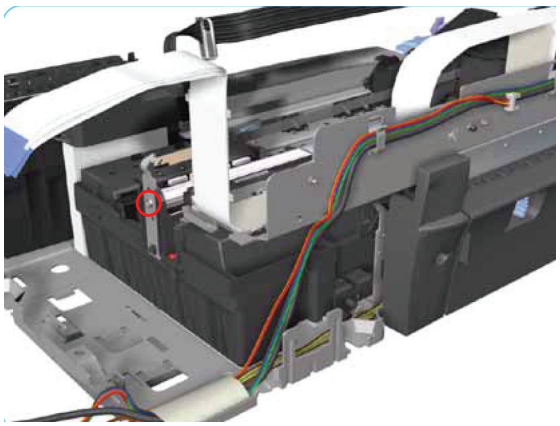

11. Remove the Encoder Strip Holder from the Printer.

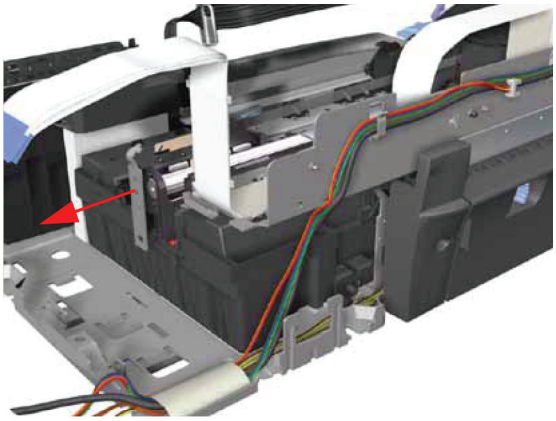

12. Slide the Service Station out of the Printer.

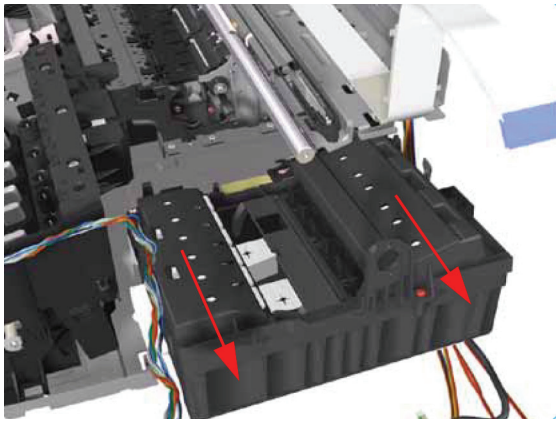

NOTE: If the Service Station is replaced, make sure that you check that the Pen to Rib Space (PRS) is within specifications.

Front Panel

Removal

NOTE: Switch off the product and remove the power cable.

1. Remove the Center Cover Center Cover on page 99
2. Remove the Left End Cover Left End Cover on page 103.
3. Release the Front Panel from inside the Left Hand Cover.

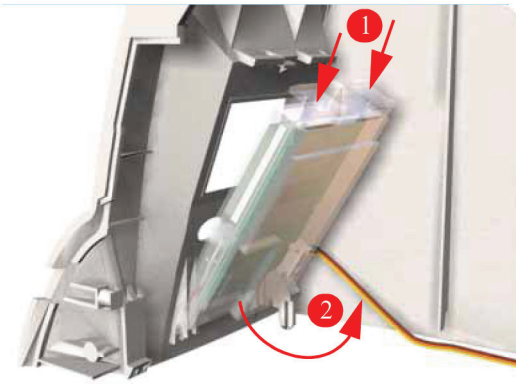

4. Disconnect the cable from the Front Panel and remove from the Printer.

5. **Important**: When installing the Front Panel, make sure you route the cable as shown:

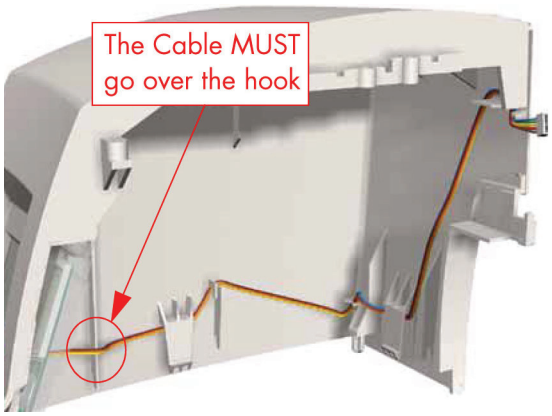

Encoder Strip

Removal

NOTE: Switch off the product and remove the power cable.

1. Remove the Center Cover Center Cover on page 99
2. Remove the Right End Cover Right End Cover on page 101.
3. Remove the Left End Cover Left End Cover on page 103.
4. Release the Encoder Strip from the left hand side of the Printer.

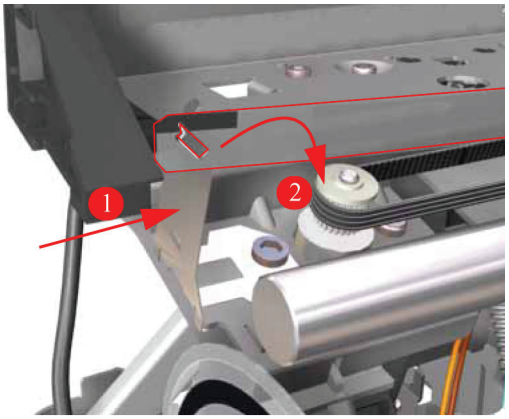

5. Release the Encoder Strip from the right hand side of the Printer.

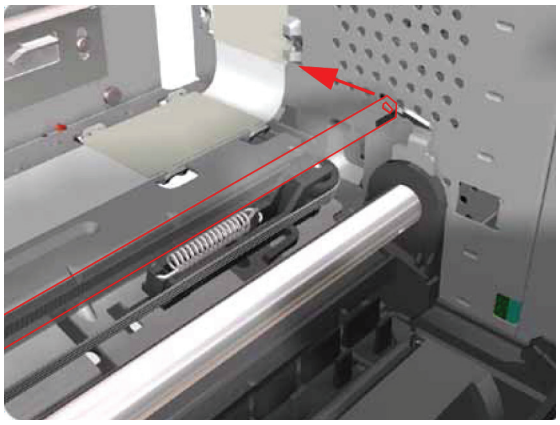

6. Gently slide out the Encoder Strip through the Carriage Assembly and remove from the Printer.

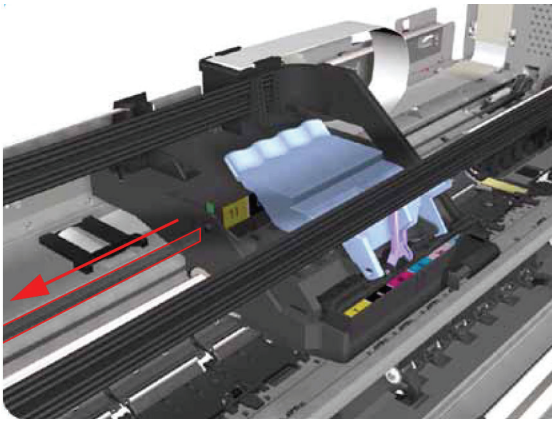

Carriage Motor

Removal

NOTE: Switch off the product and remove the power cable.

1. Remove the Center Cover Center Cover on page 99
2. Remove the Right End Cover Right End Cover on page 101.
3. Remove the Left End Cover Left End Cover on page 103.
4. Disconnect the cable from the Carriage Motor.

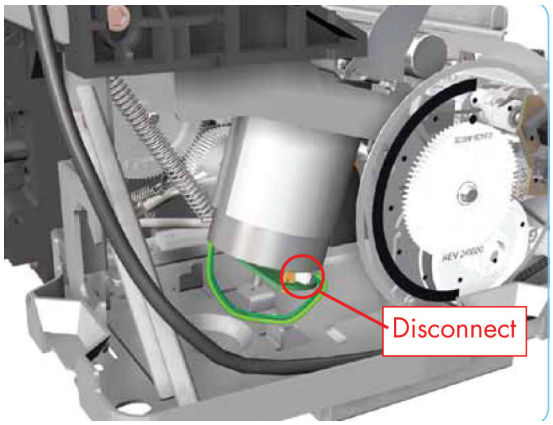

5. Release the Belt from the Carriage Motor by pushing in the Turnaround Assembly (right hand side of the printer) and at the same time releasing the Belt from the Motor on the left hand side of the printer.

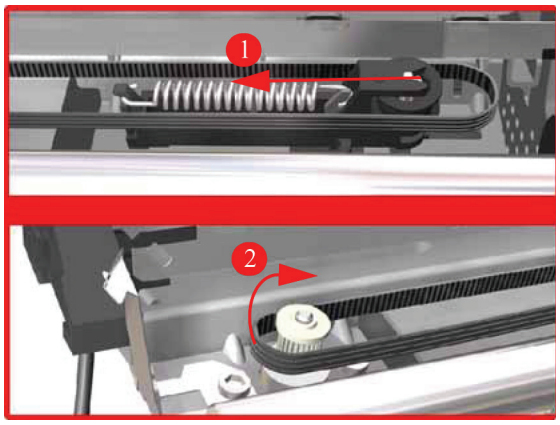

6. Remove two T-10 screws that secure the Carriage Motor.

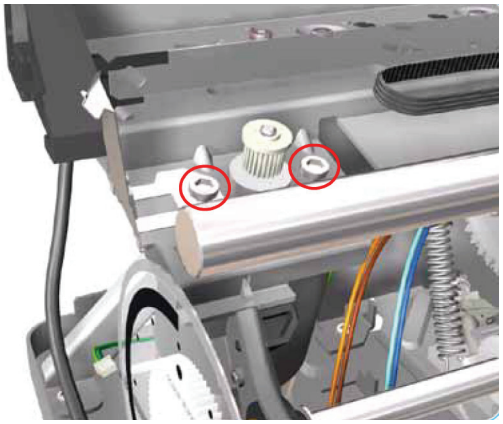

7. Remove the Carriage Motor from the Printer (needs to be removed from underneath).

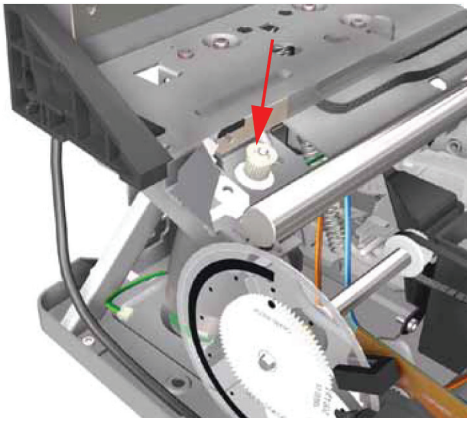

Cleanout Assembly

Removal

NOTE: Switch off the product and remove the power cable.

1. To release the Cleanout Assembly, push in the two buttons on either side.

2. Remove the Cleanout Assembly from the Printer.

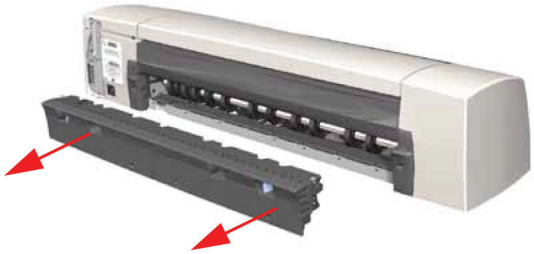

Ink Supply Tubes

Removal

NOTE: Switch off the product and remove the power cable.

1. Remove the Center Cover Center Cover on page 99
2. Remove the Right End Cover Right End Cover on page 101.
3. Release the Tubes Bracket from the Ink Supply Station by pushing the clips inwards and lifting up the Bracket.

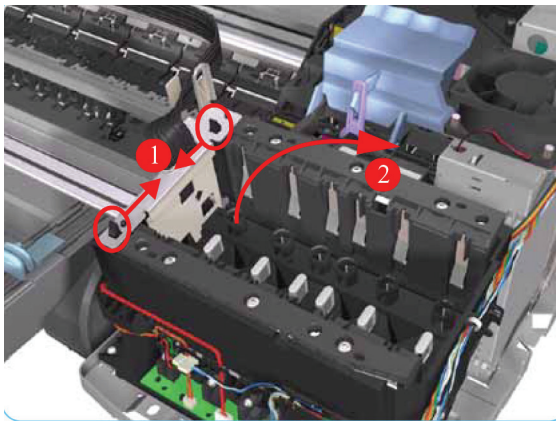

NOTE: The following step is not applicable to 10, 20, 30, 30n, 50ps.

4. Remove one T-10 screw that secures the Trailing Cable Support to the Carriage Assembly. Release the Trailing Cable Support from the Carriage Assembly.

5. Remove one T-10 screw that secures the Tube Crane to the Carriage Assembly.

6. Open the Printhead Cover and remove two T-8 screws that secure the Tube Crane to the Carriage Assembly.

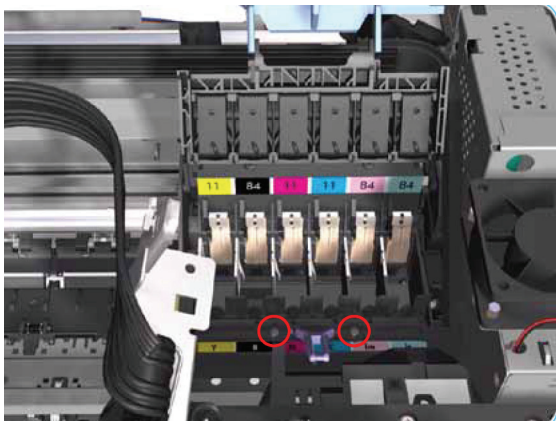

NOTE: The following step only applicable to 70, 100, 100+, 110plus

7. Lift up the Tube Crane (1) to release the PH Cover (2) from the Carriage Assembly and remove from the Printer.

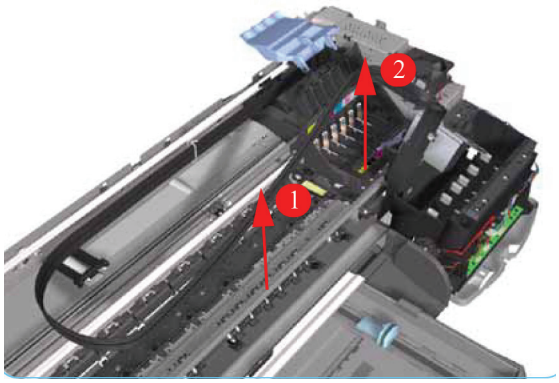

8. Release the Ink Supply Tubes from the Raceway Holder.

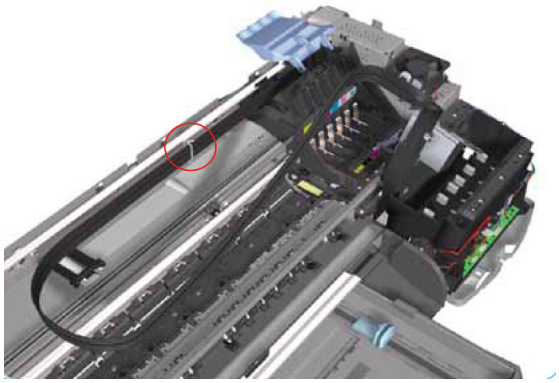

9. Release the Ink Supply Tubes and remove from the Printer.

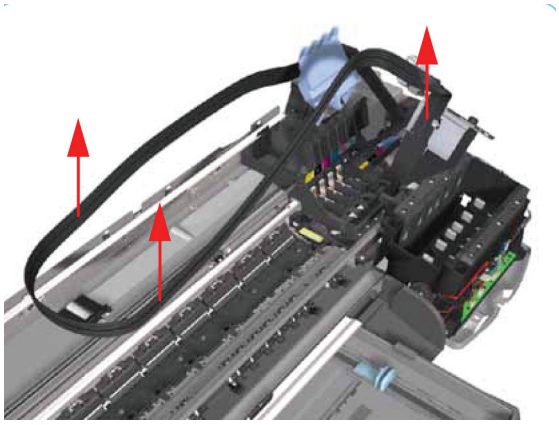

NOTE: After installing NEW Ink Supply Tubes, make sure that you prime the tubes (Refer to "Set Flag to Prime Tubes on page 57" in the "Utilities" Section).

Carriage Assembly (Applicability: 70, 100+, 110+, 111)

Removal

NOTE: Switch off the product and remove the power cable.

1. Remove the Center Cover ⇒Center Cover on page 99
2. Remove the Right End Cover ⇒Right End Cover on page 101.
3. Remove the Left End Cover ⇒Left End Cover on page 103.
4. Remove the Electronics Module ⇒Electronics Module on page 109.
5. Remove the Power Supply Unit ⇒Power Supply Unit on page 112.
6. Remove the Service Station ⇒Service Station on page 114.
7. Remove the Ink Supply Tubes ⇒Ink Supply Tubes on page 121.
8. Release the Belt from the Carriage Motor by pushing in the Turnaround Assembly (right hand side of the printer) and at the same time releasing the Belt from the Motor on the left hand side of the printer.

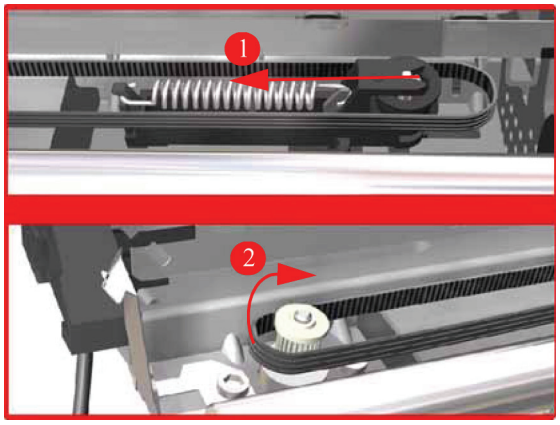

9. Release the Trailing Cable Clip from the Chassis.

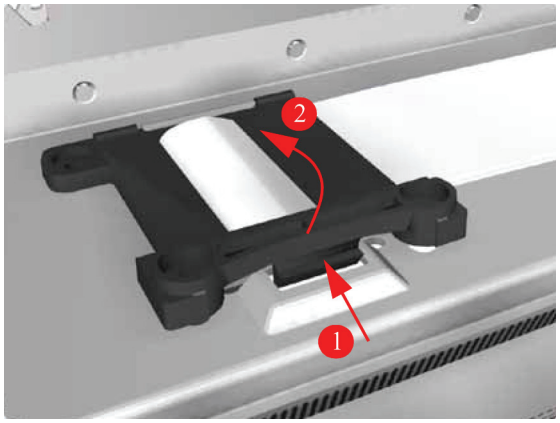

10. Release the Trailing Cable from the Chassis.

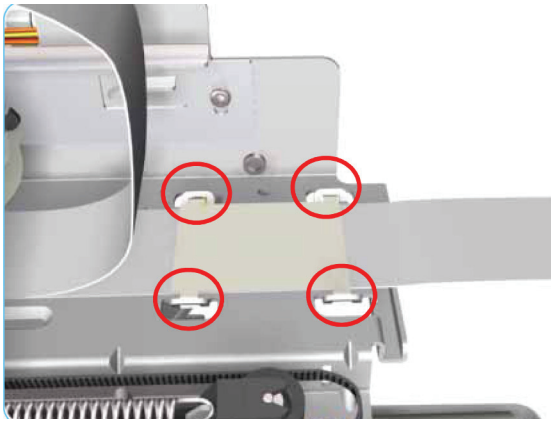

11. Slide the Carriage Assembly to the right and out of the Printer.

12. If the Carriage Assembly is to be replaced, make sure that you remove the belt (in order to install it on the new carriage). To remove the belt ⇒Carriage Belt on page 128.

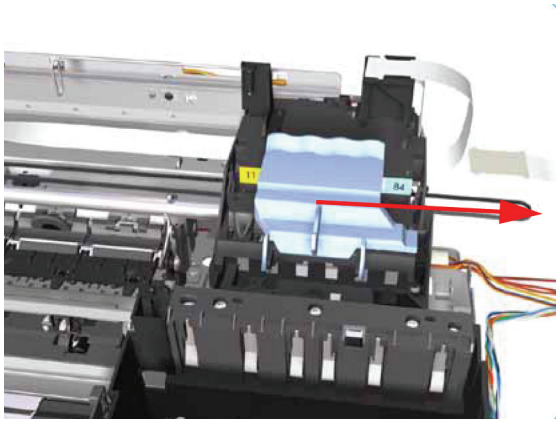

NOTE: If the Carriage is replaced by a new one, make sure that you perform the PRS Adjustment procedure.

Carriage Assembly (Applicability: 30, 30nr, 90, 90r, 130, 130nr)

Removal

NOTE: Switch off the product and remove the power cable.

1. Remove the Center Cover ⇒Center Cover on page 99
2. Remove the Right End Cover ⇒Right End Cover on page 101.
3. Remove the Left End Cover ⇒Left End Cover on page 103.
4. Remove the Electronics Module ⇒Electronics Module on page 109.
5. Remove the Power Supply Unit ⇒Power Supply Unit on page 112.
6. Remove the Service Station ⇒Service Station on page 114.
7. Remove the Ink Supply Tubes ⇒Ink Supply Tubes on page 121.

NOTE: Following step only applicable to 90, 90r, 130, 130nr.

8. Remove three T-10 screws that secure the Trailing Cable Clip to the Chassis.

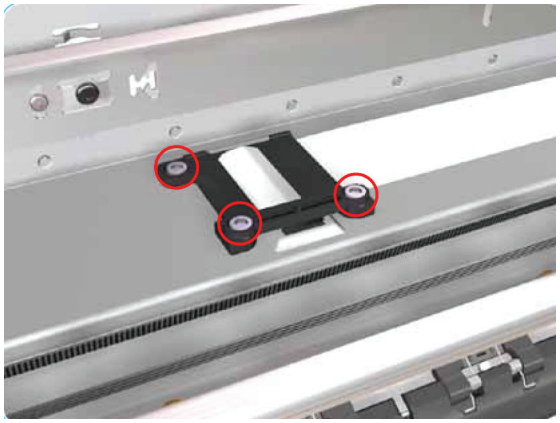

9. Release the Trailing Cable Clip from the Chassis.

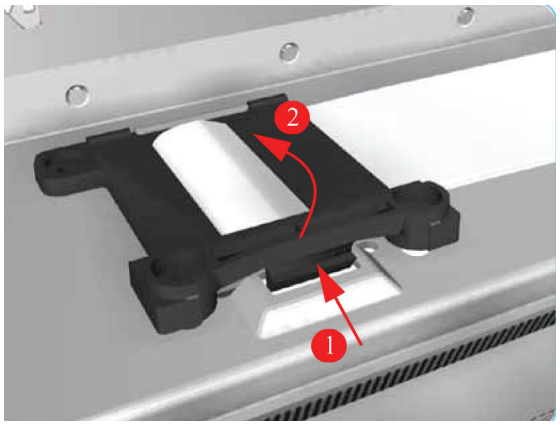

10. Release the Trailing Cable from the Chassis.

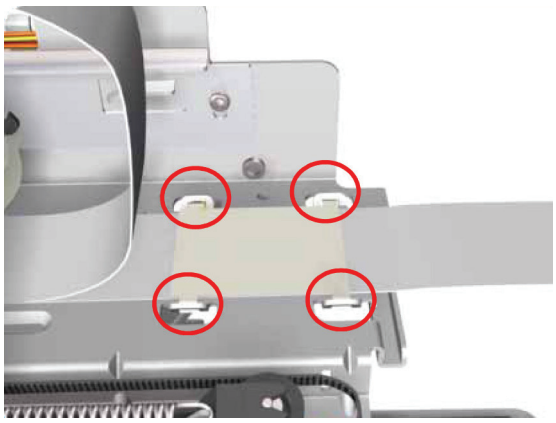

NOTE: Following step only applicable to 90, 90r, 130, 130nr.

11. Remove two T-10 screws that secure the Turnaround Stopper. Remove the Turnaround Stopper from the Printer.

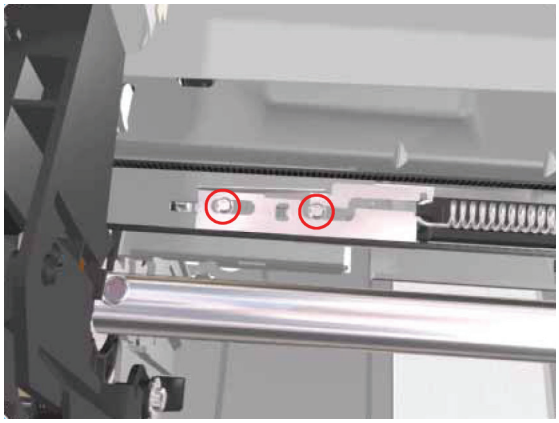

12. Release the Belt from the Carriage Motor by pushing in the Turnaround Assembly (right hand side of the printer) and at the same time releasing the Belt from the Motor on the left hand side of the printer.

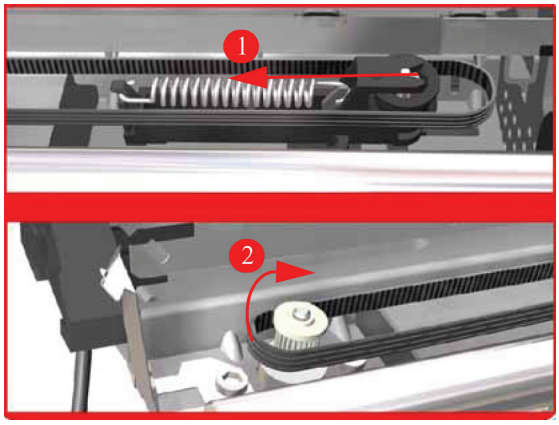

13. Slide the Carriage Assembly to the right and out of the Printer.

14. If the Carriage Assembly is to be replaced, make sure that you remove the belt (in order to install it on the new carriage). To remove the belt Carriage Belt on page 128.

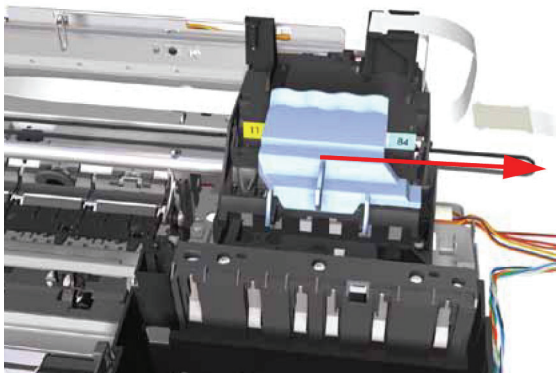

NOTE: If the Carriage is replaced by a new one, make sure that you perform the PRS Adjustment procedure.

Installation of the Carriage Assembly - IMPORTANT (Only applicable to 90, 90r, 130, 130nr)

After re-installing the Carriage Assembly and Belt, take note of these steps for the correct installation of the Turnaround Stopper. These steps must be followed in exactly the same sequence:

1. Place the Turnaround Stopper in to position and locate the slot in the Stopper on to the Turnaround Assembly. This step is very important since it will determine the space between the Stopper and the Turnaround Assembly.

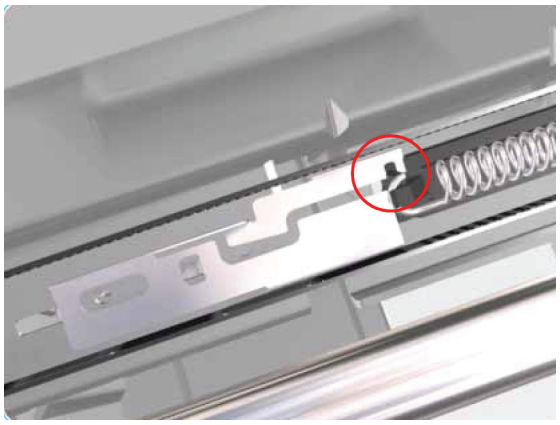

2. Insert the first screw (left) and tighten it.

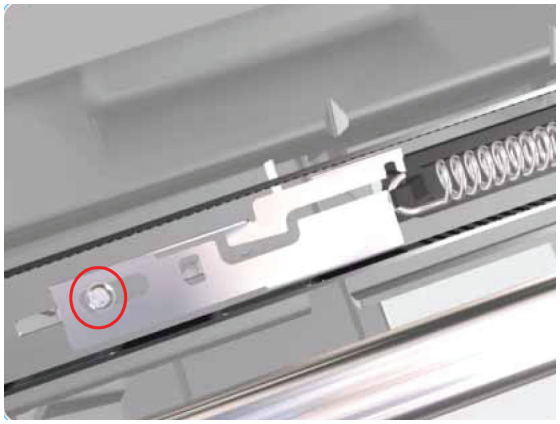

3. Insert the 2nd screw (right) and tighten it. As you tighten the screw you should notice that the slot in the Stopper will rise away from the Turnaround Assembly.

NOTE: After the installation of the Carriage Assembly and the Turnaround Stopper, you must first check that the Cutter cuts the media correctly (if the Printer has the Rollfeed and Cutter installed).

Carriage Belt

Removal

NOTE: Switch off the product and remove the power cable.

1. Remove the Center Cover ⇒Center Cover on page 99
2. Remove the Right End Cover ⇒Right End Cover on page 101.
3. Remove the Electronics Module ⇒Electronics Module on page 109.
4. Remove the Power Supply Unit ⇒Power Supply Unit on page 112.
5. Remove the Service Station ⇒Service Station on page 114.
6. Remove the Ink Supply Tubes ⇒Ink Supply Tubes on page 121.
7. Remove the Carriage Assembly ⇒Carriage Assembly (Applicability: 70, 100+, 110+, 111) on page 123.
8. Release the Belt from the bottom of the Carriage Assembly.

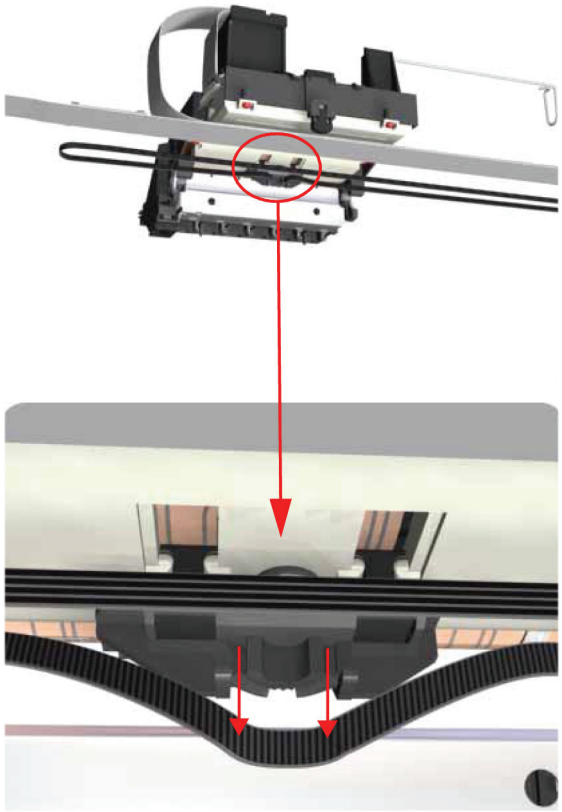

Starwheel Assembly (Applicability: 30, 30n)

Removal

NOTE: Switch off the product and remove the power cable.

1. Remove the Center Cover ⇒Center Cover on page 99.

2. Remove one T-10 screw (**Type A**) that secures the Starwheel Assembly to the right hand side of the printer.

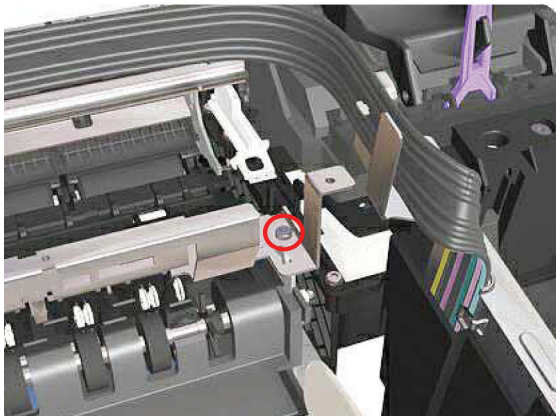

3. Remove one T-10 screw (**Type A**) that secures the Starwheel Assembly to the left hand side of the printer.

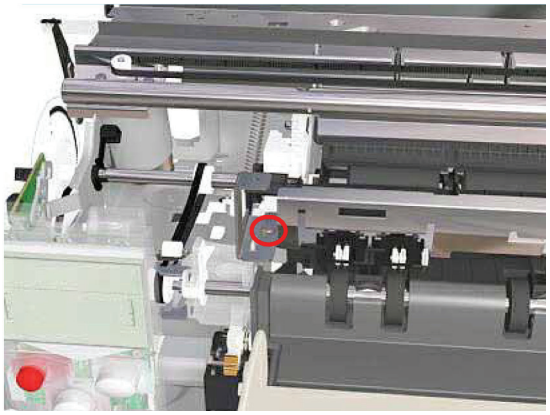

4. Remove the Starwheel Assembly.

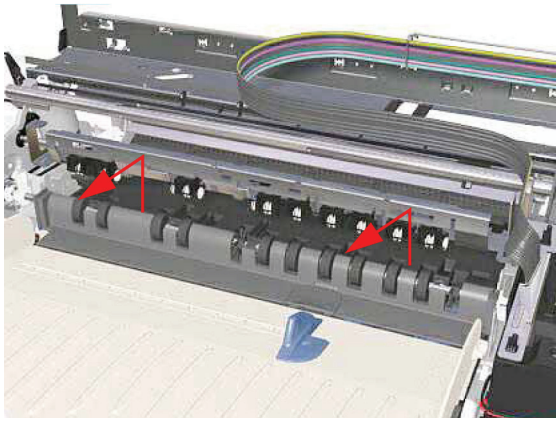

Starwheel Assembly

Removal

NOTE: Switch off the product and remove the power cable.

1. Remove the Center Cover Center Cover on page 99.
2. Remove the Right End Cover Right End Cover on page 101.

3. Remove the Left End Cover ⇒Left End Cover on page 103.

4. Remove one T-10 screw that secures the Starwheel Assembly to the right hand side of the printer.

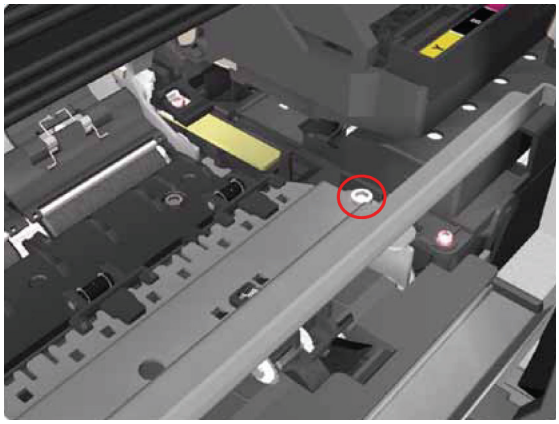

5. Remove two T-10 screws that secure the Starwheel Assembly to the left hand side of the printer.

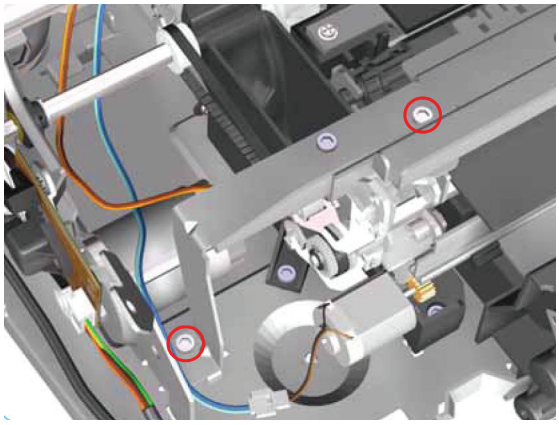

6. Remove the Starwheel Assembly.

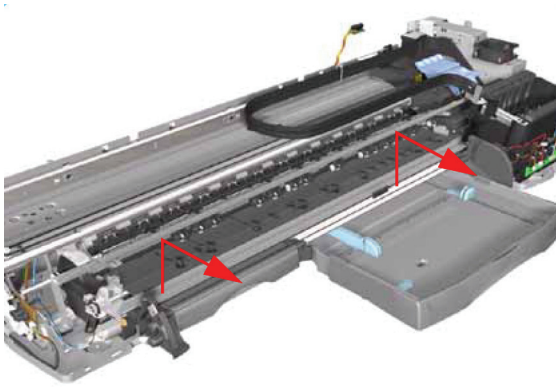

Print Platen Assembly

Removal

NOTE: Switch off the product and remove the power cable.

1. Remove the Center Cover ⇒Center Cover on page 99.

2. Remove the Right End Cover ⇒Right End Cover on page 101.

3. Remove the Left End Cover ⇒Left End Cover on page 103.

4. Remove the Starwheel Assembly ⇒Starwheel Assembly on page 130.

5. Release the Belt from the Print Platen Assembly.

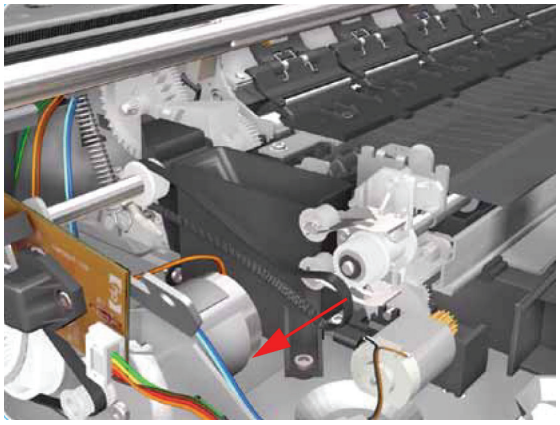

6. Remove one T-10 screw that secures the Spring Idler. Remove the Spring Idler from the Printer.

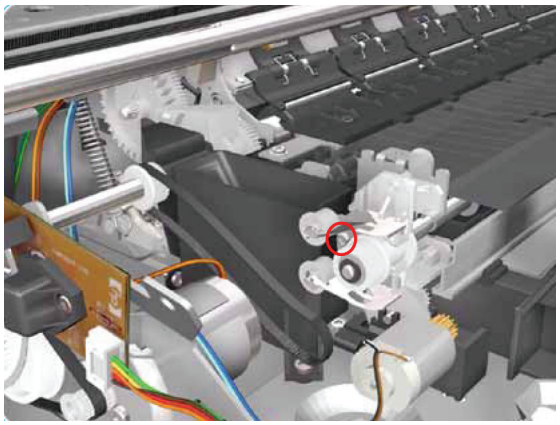

7. Release the locking mechanism from the left hand side of the Printer.

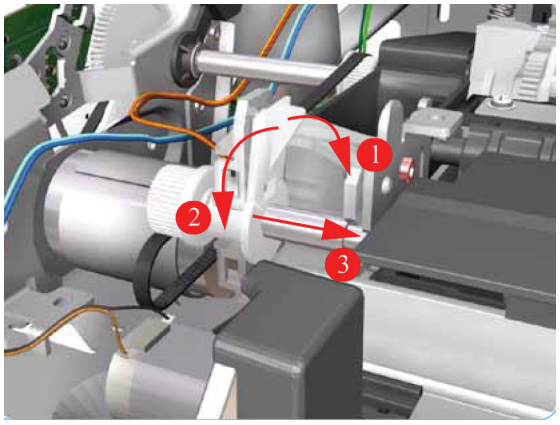

8. Release the locking mechanism from the right hand side of the Printer.

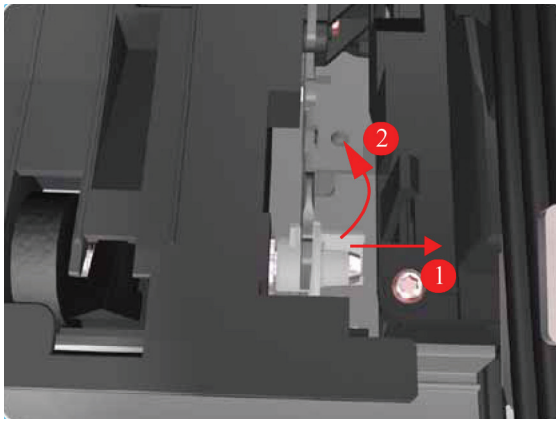

9. Slide out the complete Print Platen Assembly.

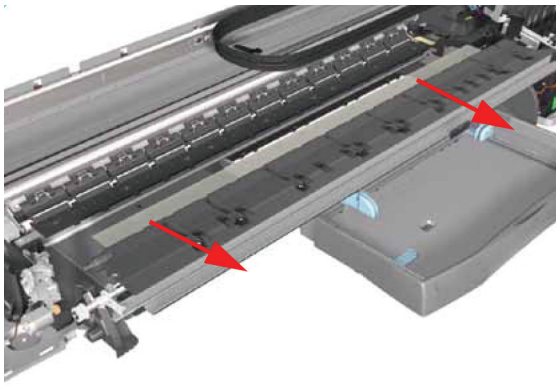

Output Separator (Applicability: 30, 30n)

Removal

NOTE: Switch off the product and remove the power cable.

1. Remove the Front Cover ⇒Center Cover on page 99.
2. Remove the Center Cover ⇒Center Cover on page 99.
3. Remove the Output Tray.
4. Unclip the Output Separator and remove from the Printer.

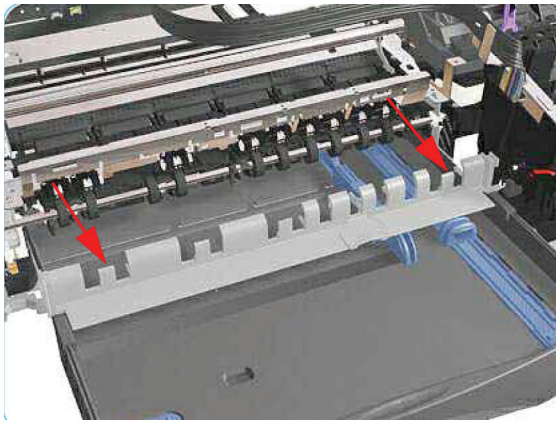

Ramp Motor Assembly

(Not applicable to 30, 30n)

Removal

NOTE: Switch off the product and remove the power cable.

1. Remove the Center Cover ⇒Center Cover on page 99.
2. Remove the Left End Cover ⇒Left End Cover on page 103.
3. Remove the Starwheel Assembly ⇒Starwheel Assembly on page 130.
4. Remove the Print Platen Assembly ⇒Print Platen Assembly on page 131.
5. Remove two T-10 screws that secure the Front Left Bracket.

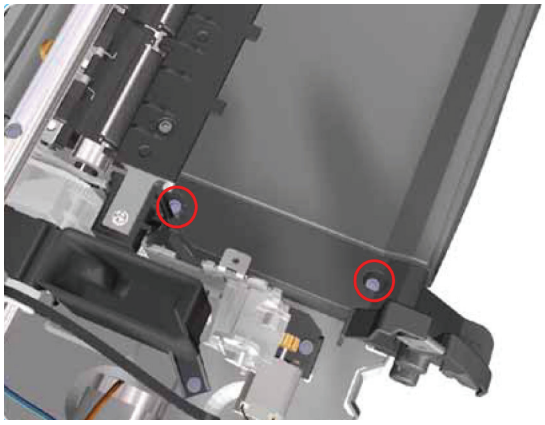

6. Remove the Front Left Bracket from the Printer.

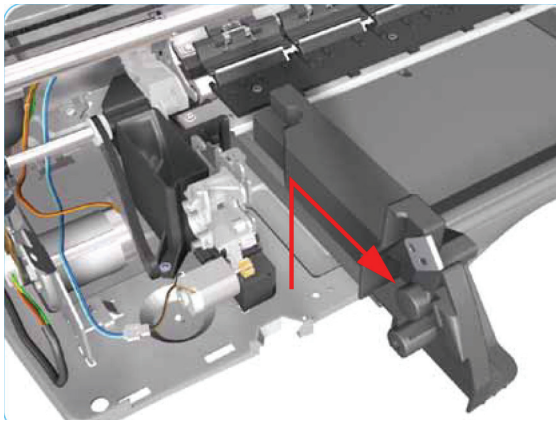

7. Disconnect the Ramp Motor cable.

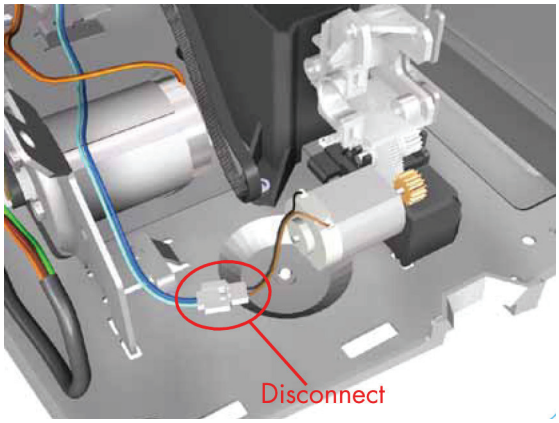

8. Remove one T-10 screw from the Ramp Motor Assembly.

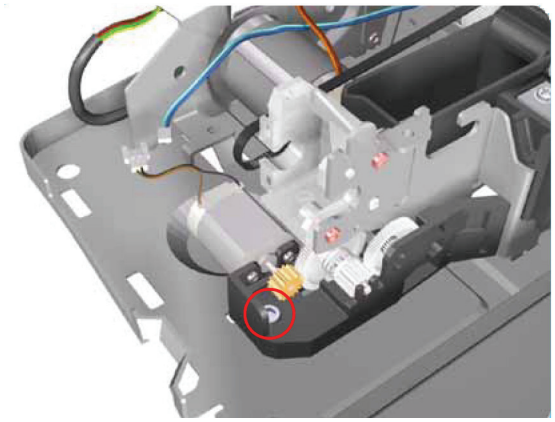

9. Remove one T-10 screw from the Ramp Motor Assembly.

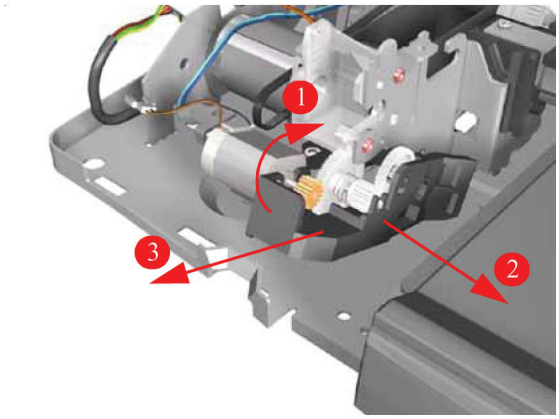

Output Mechanism Assembly (Applicability: 30, 30n)

Removal

NOTE: Switch off the product and remove the power cable.

1. Remove the Front Cover Front Cover (Applicability: 30, 30n, 50ps) on page 98.
2. Remove the Center Cover Center Cover on page 99.
3. Remove the Right End Cover Right End Cover on page 101

4. Remove the Left End Cover ⇒Left End Cover on page 103.
5. Remove the Output Separator ⇒Output Separator (Applicability: 30, 30n) on page 133.
6. Remove the Starwheel Assembly ⇒Starwheel Assembly on page 130.
7. Release the Belt from the Output Mechanism Assembly.

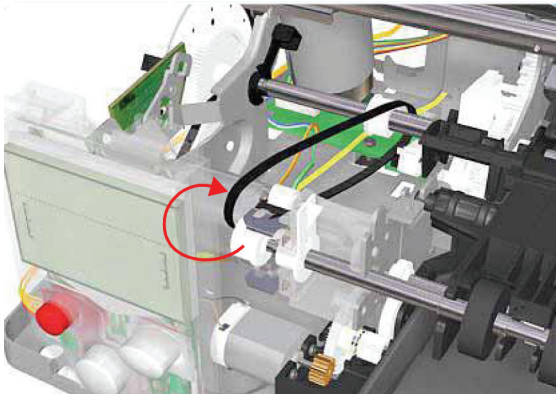

8. Release the locking mechanism from the left hand side of the Printer.

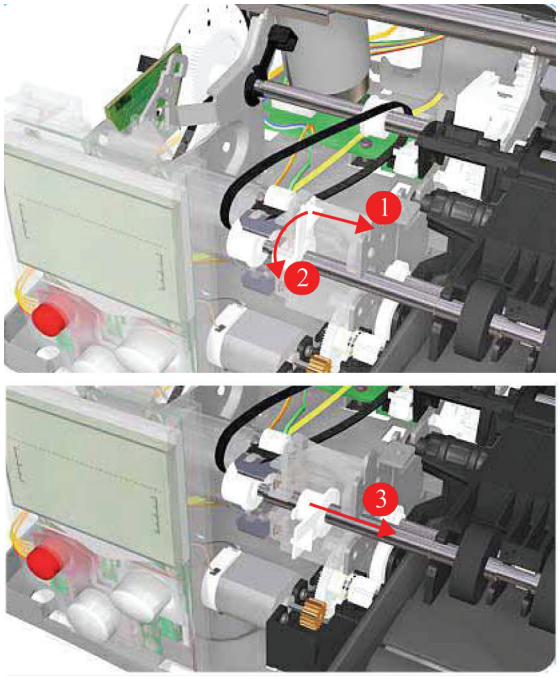

9. Release the locking mechanism from the right hand side of the Printer.

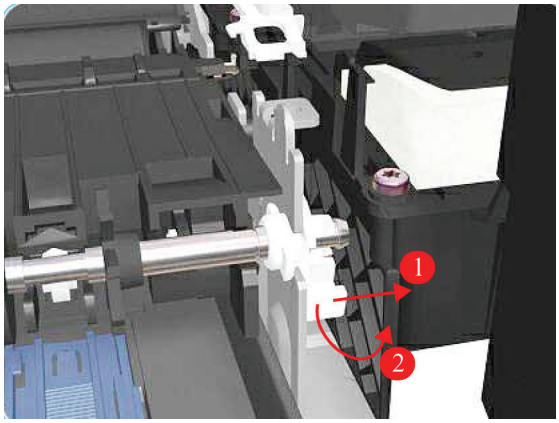

10. Slide out the complete Output Mechanism Assembly.

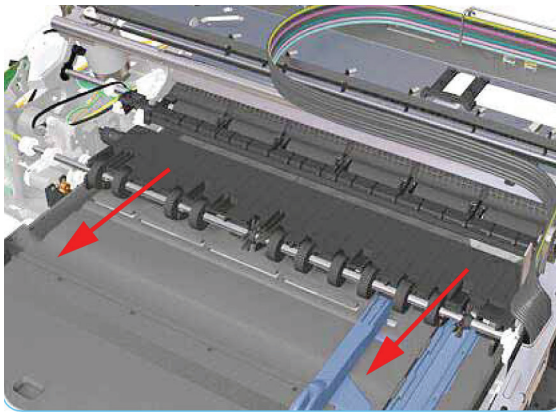

Spittoon (If Installed in the Printer)

(Not applicable to 30, 30n)

Removal

NOTE: Switch off the product and remove the power cable.

1. Remove the Center Cover ⇒Center Cover on page 99.
2. Remove the Left End Cover ⇒Left End Cover on page 103.
3. Remove the Starwheel Assembly ⇒Starwheel Assembly on page 130.

4. Remove one T-10 screw that secures the Spittoon.

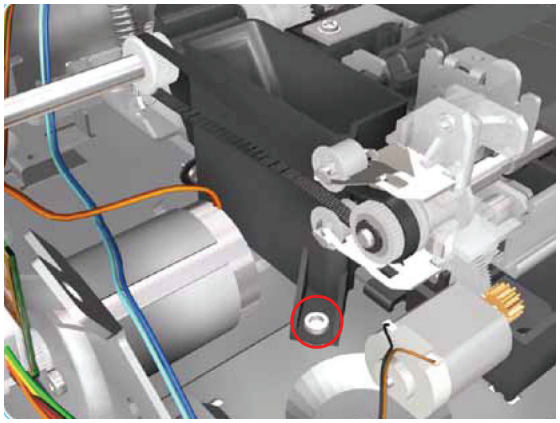

5. Remove the Spittoon from the Printer.

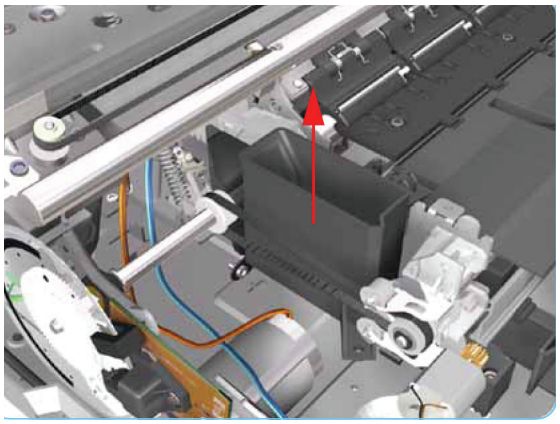

Pivot Assembly

(Not applicable to 30, 30n)

Removal

NOTE: Switch off the product and remove the power cable.

1. Remove the Center Cover Center Cover on page 99.
2. Remove the Left End Cover Left End Cover on page 103.
3. Remove the Right End Cover Right End Cover on page 101.
4. Remove the Starwheel Assy Starwheel Assembly on page 130.

5. Remove one T-8 screw and washer that secure the Pivot Assembly on the left hand side of the Printer.

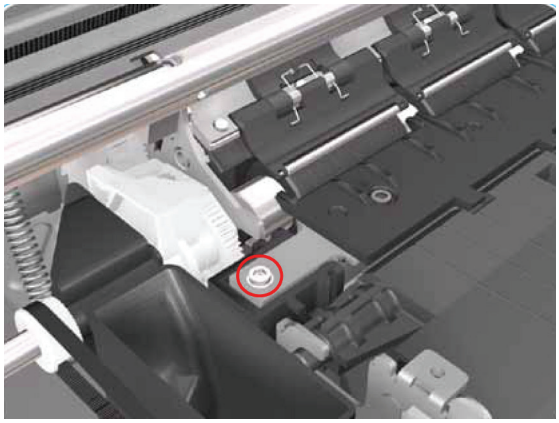

6. Remove one T-8 screw and washer that secure the Pivot Assembly on the right hand side of the Printer.

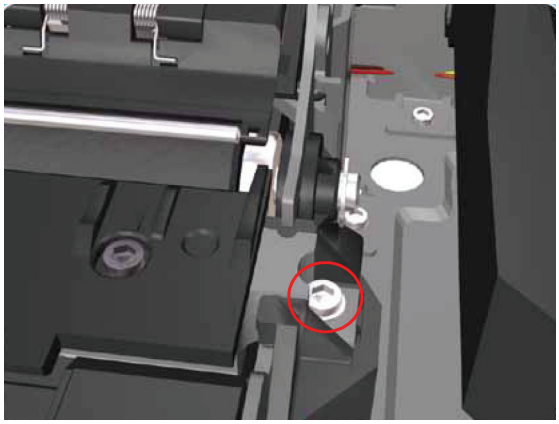

7. Remove the Pivot Assembly from the Printer.

NOTE: After removing or replacing the Pivot Assembly, make sure that you perform the PRS Adjustment procedure.

Make sure you use NEW screws to install the Pivot Assembly when it has been removed or replaced.

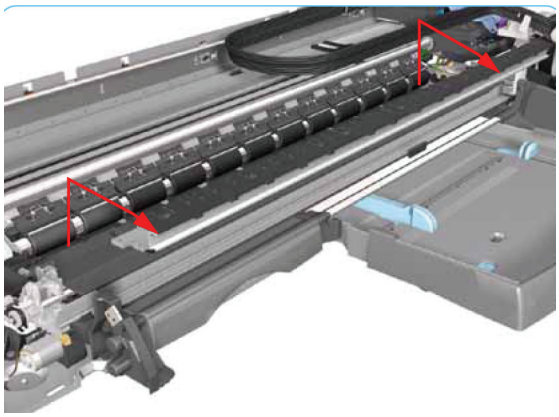

Feed Roller Assembly (Applicability: 30, 30n)

Removal

NOTE: Switch off the product and remove the power cable.

1. Remove the Front Cover ⇒ Front Cover (Applicability: 30, 30n, 50ps) on page 98.
2. Remove the Center Cover ⇒ Center Cover on page 99
3. Remove the Right End Cover ⇒ Right End Cover on page 101.
4. Remove the Left End Cover ⇒ Left End Cover on page 103.
5. Remove the Electronics Module ⇒ Electronics Module on page 109.
6. Remove the Starwheel Assembly ⇒ Starwheel Assembly on page 130.
7. Remove the Output Separator ⇒ Output Separator (Applicability: 30, 30n) on page 133
8. Remove the Output Mechanism Assembly ⇒ Output Mechanism Assembly (Applicability: 30, 30n) on page 135.
9. Remove the Paper-Axis Motor Drive Assembly ⇒ Paper-Axis Motor Drive Assembly (Applicable only to 30, 30n) on page 158.
10. Release the locking mechanism from the left hand side of the Printer.

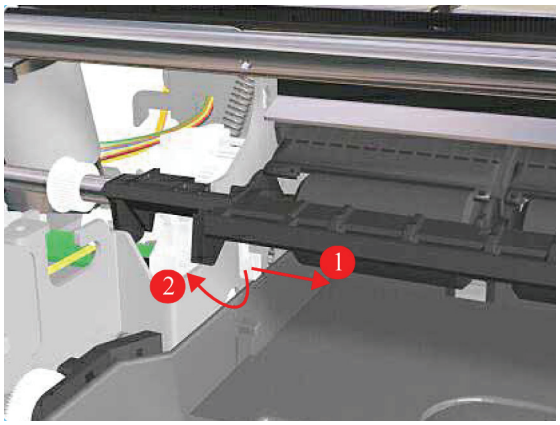

11. Release the locking mechanism from the right hand side of the Printer.

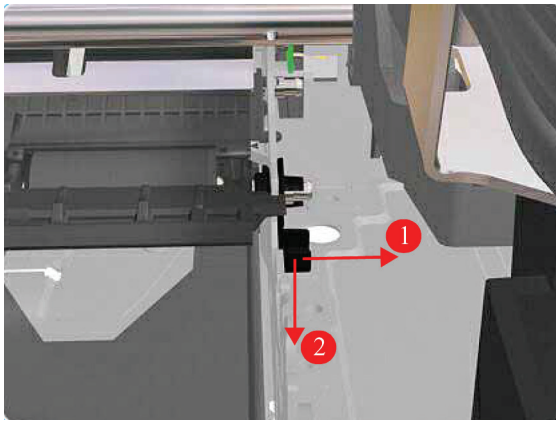

12. Release the Pin Caber and remove from the Printer.

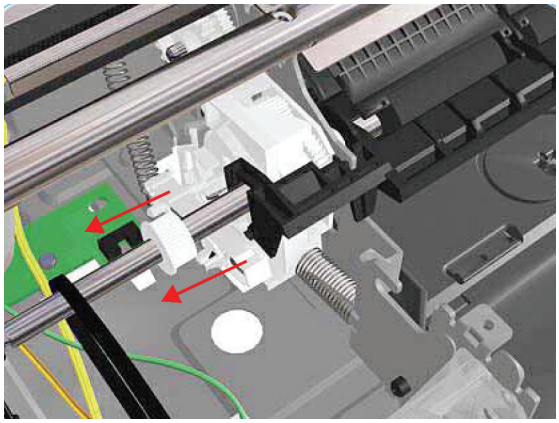

13. Release the Spring.

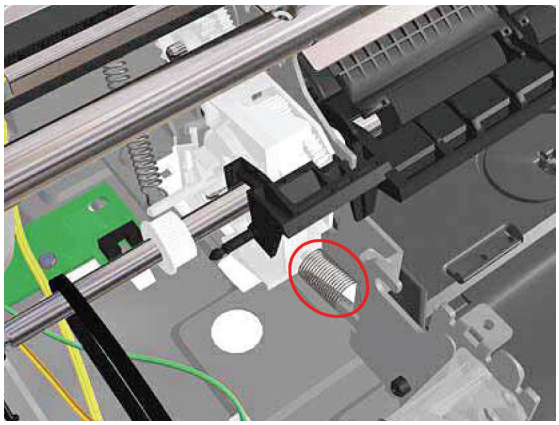

14. Raise the locks so that they are aligned with the cutouts and lift out the Feed Roller Assembly from the Printer.

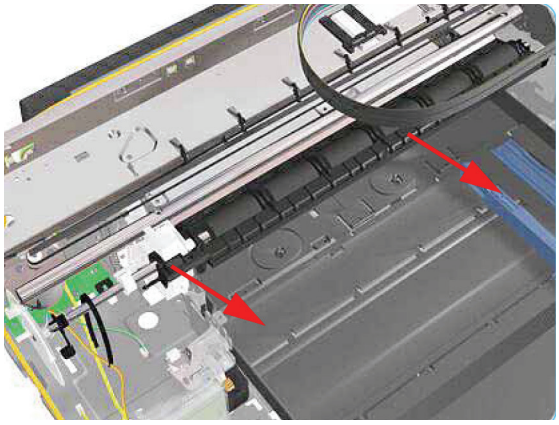

NOTE: After removing or replacing the Feed Roller Assembly, make sure that you perform the PRS Adjustment procedure and the Accuracy Calibration.

Feed Roller Assembly

(Not applicable to Designjets 30, 30n)

Removal

NOTE: Switch off the product and remove the power cable.

1. Remove the Center Cover ⇒ Center Cover on page 99
2. Remove the Right End Cover ⇒ Right End Cover on page 101.
3. Remove the Left End Cover ⇒ Left End Cover on page 103.
4. Remove the Electronics Module ⇒ Electronics Module on page 109.
5. Remove the Power Supply Unit ⇒ Power Supply Unit on page 112.
6. Remove the Service Station ⇒ Service Station on page 114.
7. Remove the Starwheel Assembly ⇒ Starwheel Assembly on page 130.
8. Remove the Print Platen Assembly ⇒ Print Platen Assembly on page 131.
9. Remove the Spittoon (if installed) ⇒ Spittoon (If Installed in the Printer) on page 137.
10. Remove the Pivot Assembly ⇒ Pivot Assembly on page 138.
11. Disconnect the Paper-Axis and Encoder cables.

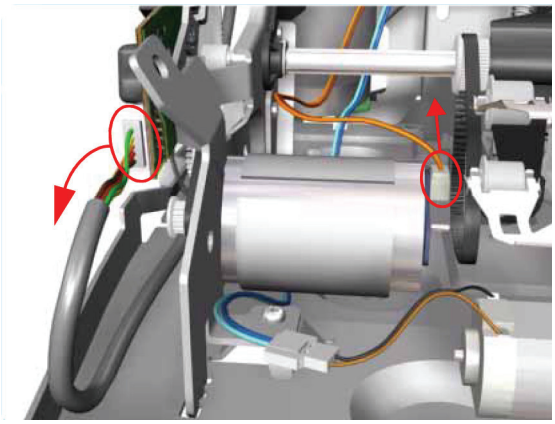

12. Remove one T-10 screw that secures the Paper-Axis Motor Mount.

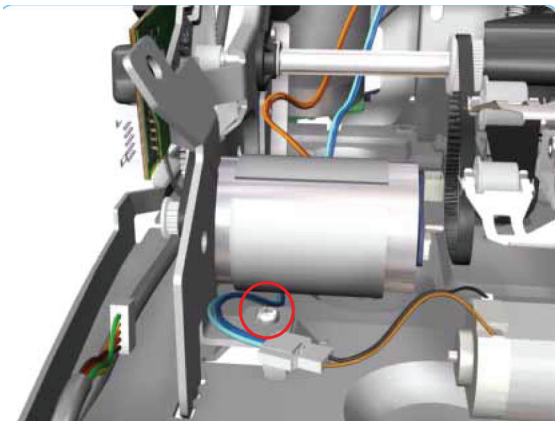

13. Remove two T-10 screws that secure the Pivot Assembly Support on the right hand side of the Printer.

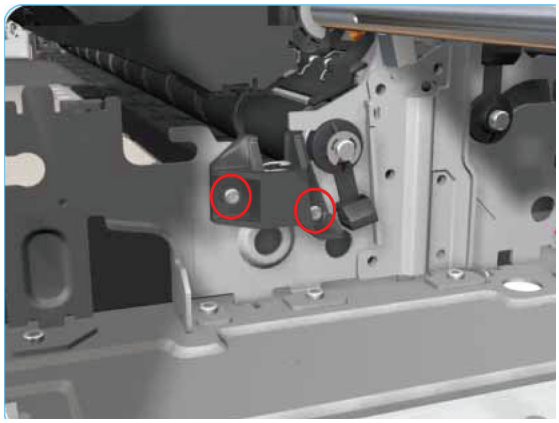

14. Remove the Pivot Assembly Support from the Printer.

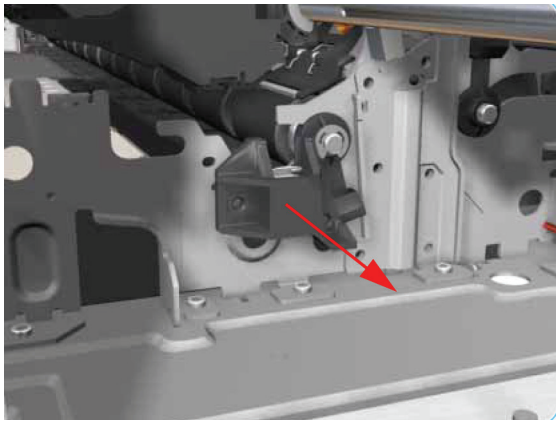

15. Release the locking mechanism from the right hand side of the Printer.

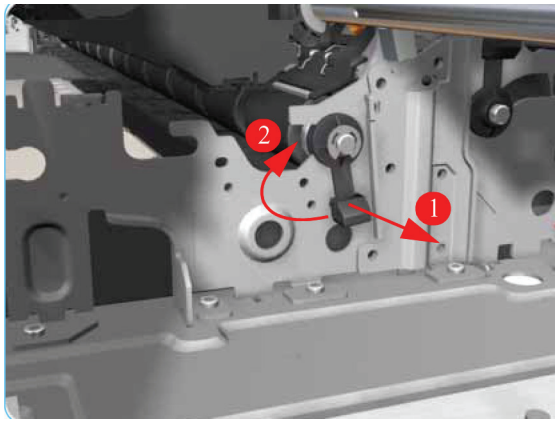

16. Remove one T-10 screw and nut that secures the Feed-Roller Support on the left hand side of the Printer.

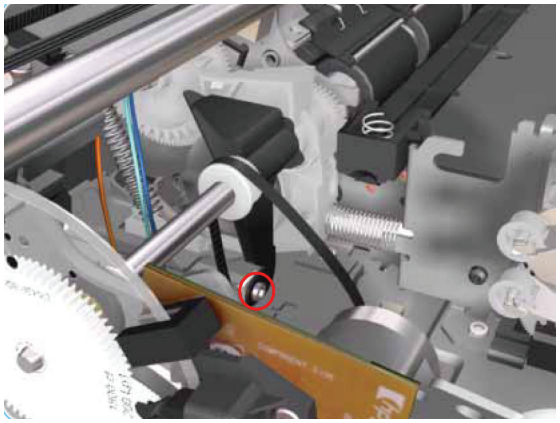

17. Remove two T-10 screws that secure the bracket on the left hand side of the Printer.

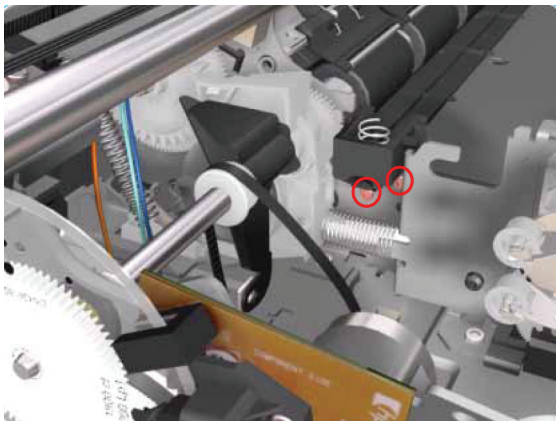

18. Remove the Bracket from the Printer.

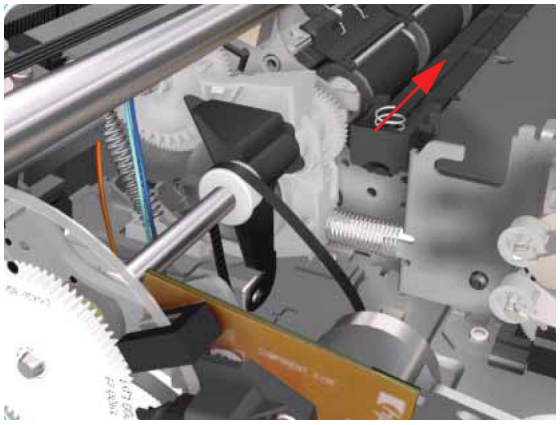

19. Release the locking mechanism from the left hand side of the Printer.

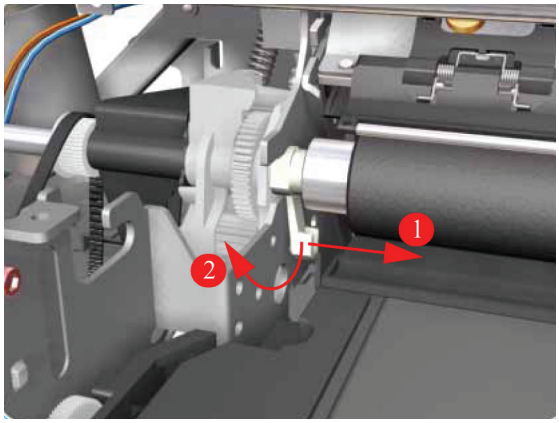

20. Release the Spring from the Bracket.

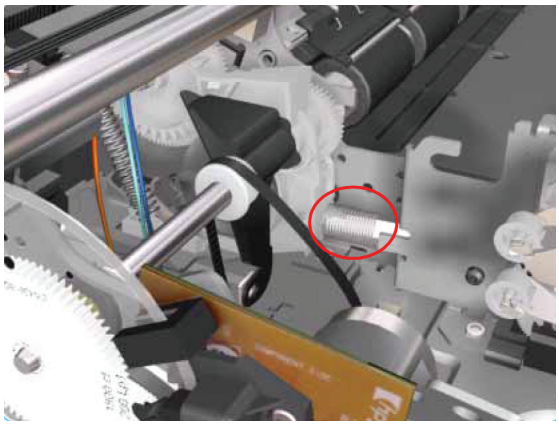

21. Raise the locks so that they are aligned with the cutouts and lift out the Feed Roller Assembly (including the Paper-Axis Motor) from the Printer.

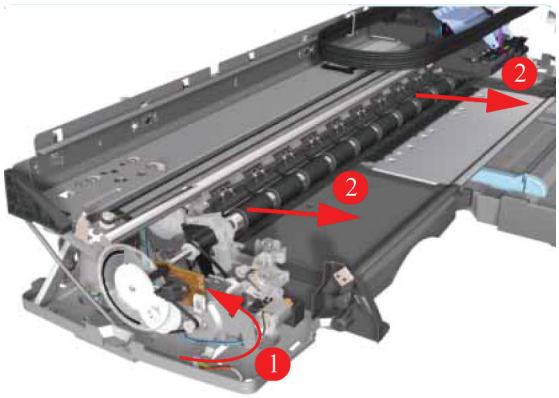

NOTE: After removing or replacing the Feed Roller Assembly, make sure that you perform the PRS Adjustment procedure and the Accuracy Calibration.

Pick Assembly (Applicability: 30, 30n)

Removal

NOTE: Switch off the product and remove the power cable.

1. Remove the Cleanout Assembly ⇒ Cleanout Assembly on page 120.

2. Release the locking mechanism that secures the Pick Assembly on the right hand side of the printer (looking from the rear).

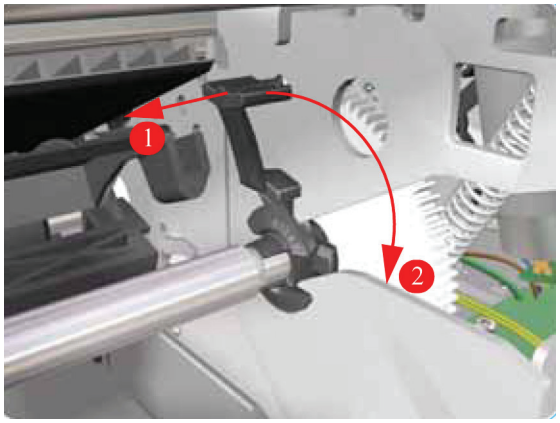

3. Release the locking mechanism that secures the Pick Assembly on the left hand side of the printer (looking from the rear)

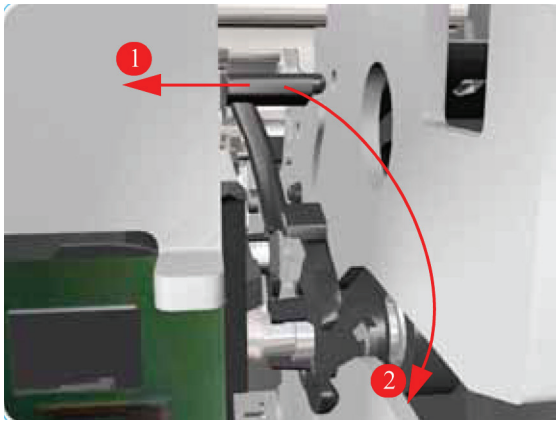

4. Raise the locks so that they are aligned with the cutouts and lift out the Pick Assembly from the Printer.

Pick Assembly

(Not applicable to 30, 30n)

Removal

NOTE: Switch off the product and remove the power cable.

1. Remove the Cleanout Assembly ⇒ Cleanout Assembly on page 120.
2. Remove the Center Cover ⇒ Center Cover on page 99
3. Remove the Right End Cover ⇒ Right End Cover on page 101.
4. Remove the Left End Cover ⇒ Left End Cover on page 103.
5. Remove the Electronics Module ⇒ Electronics Module on page 109.
6. Remove the Power Supply Unit ⇒Power Supply Unit on page 112.
7. Remove the Service Station ⇒Service Station on page 114.
8. Remove the Encoder Strip ⇒Encoder Strip on page 118.
9. Remove the Ink Supply Tubes ⇒Ink Supply Tubes on page 121.
10. Remove the Carriage Assembly ⇒Carriage Assembly (Applicability: 70, 100+, 110+, 111) on page 123.
11. Remove four screws that secure the Hanger Assembly on the left hand side of the Printer.

12. Remove one screw that secures the Hanger Assembly on the left hand side of the Printer.

13. Disconnect the Paper-Axis, Encoder and Ramp Motor cables.

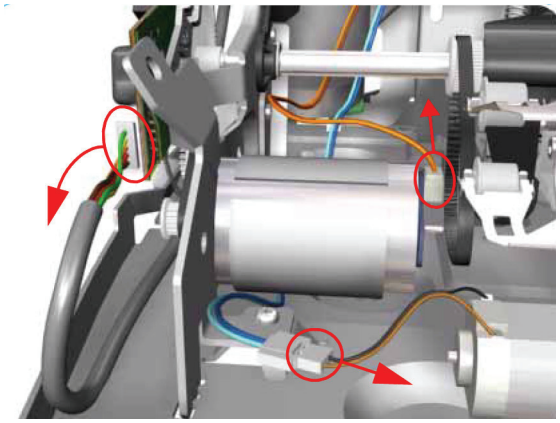

14. Remove one screw from the Rear Left Trim Bracket.

15. Remove the Rear Left Trim Bracket from the Printer.

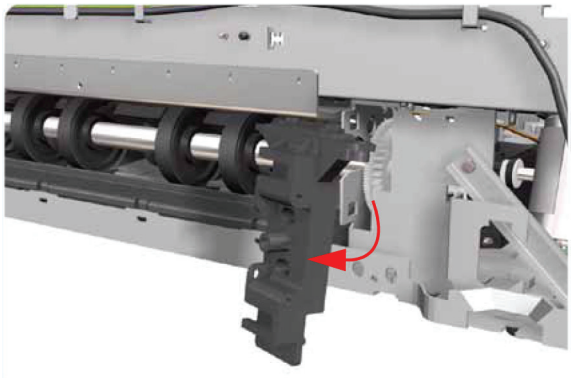

16. Remove four screws that secure the Hanger Assembly on the right hand side of the Printer.

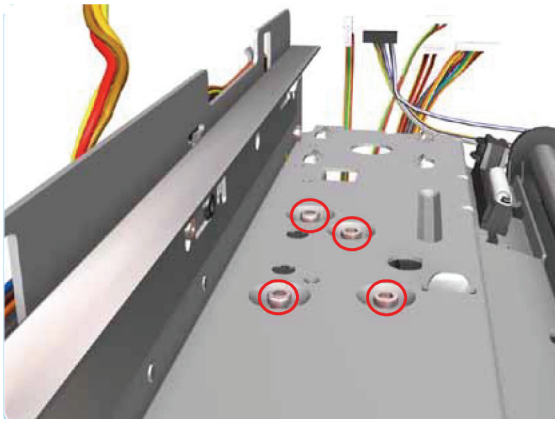

17. Remove two screws that secure the Hanger Assembly on the right hand side of the Printer.

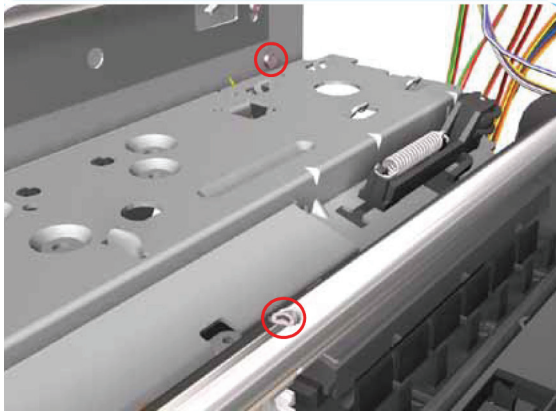

18. Remove one T-10 screw from the Rear Right Trim.

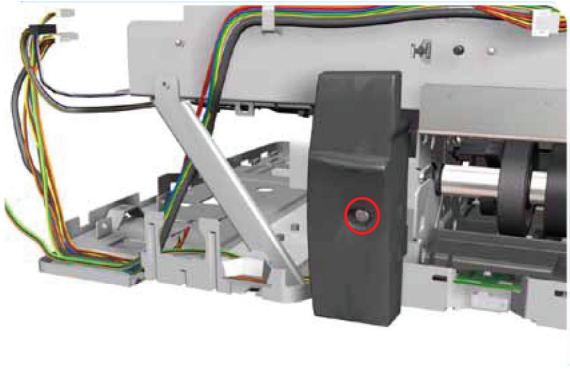

19. Remove the Rear Right Trim from the Printer.

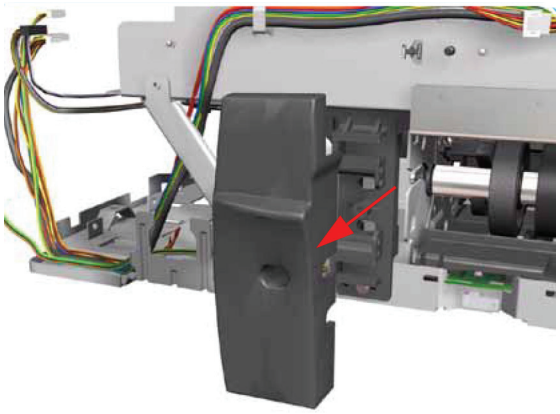

20. Remove one screw from the Rear Right Trim Bracket.

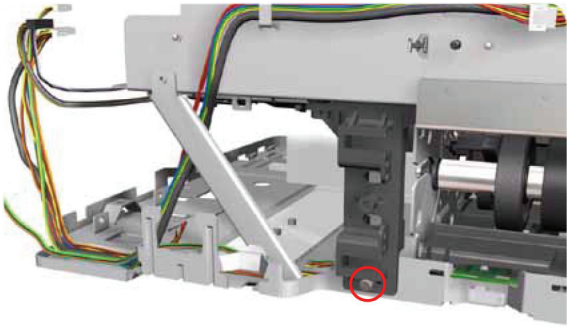

21. Remove the Rear Right Trim Bracket from the Printer.

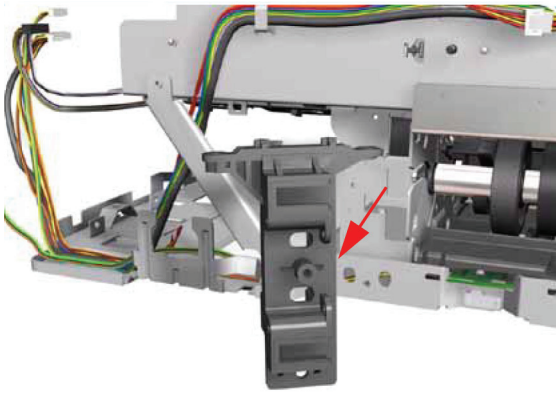

22. Remove the Hanger Assembly from the Printer.

NOTE: If there are any cables still attached between the Hanger Assembly and the Printer then disconnect them before removing the Hanger Assembly.

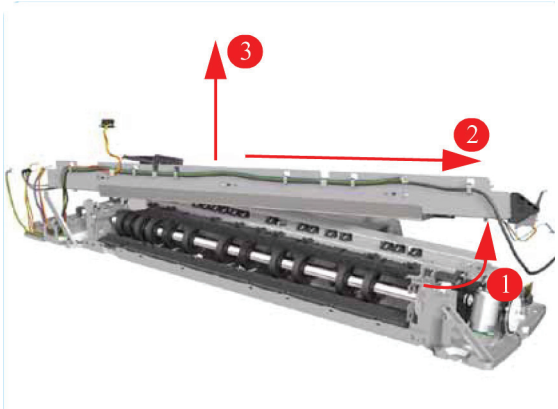

23. Release the locking mechanism that secures the Pick Assembly on the right hand side of the printer (looking from the rear).

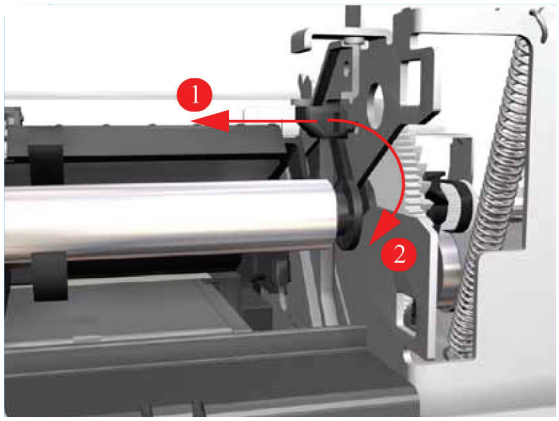

24. Release the locking mechanism that secures the Pick Assembly on the right hand side of the printer (looking from the rear).

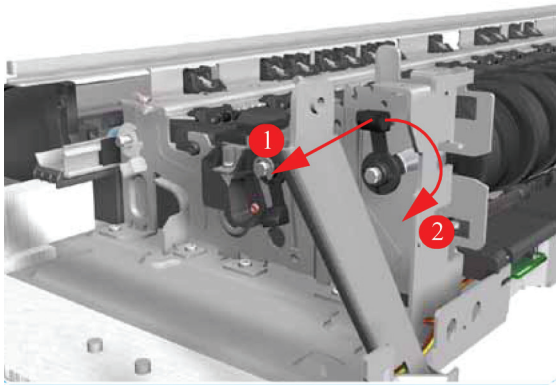

25. Raise the locks so that they are aligned with the cutouts and lift out the Pick Assembly from the Printer.

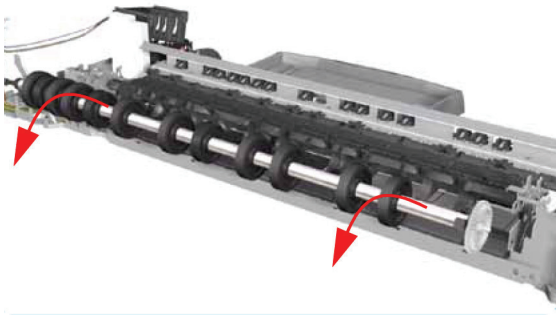

Pinch Assembly (Applicability: 30, 30n)

Removal

NOTE: Switch off the product and remove the power cable.

1. Remove the Center Cover ⇒Center Cover on page 99.
2. Remove the Cleanout Assembly ⇒Cleanout Assembly on page 120.
3. Remove the Pick Assembly ⇒Pick Assembly on page 146.
4. Release the Out-of-Paper Sensor from the Pinch Assembly by pinching the tabs on either side.

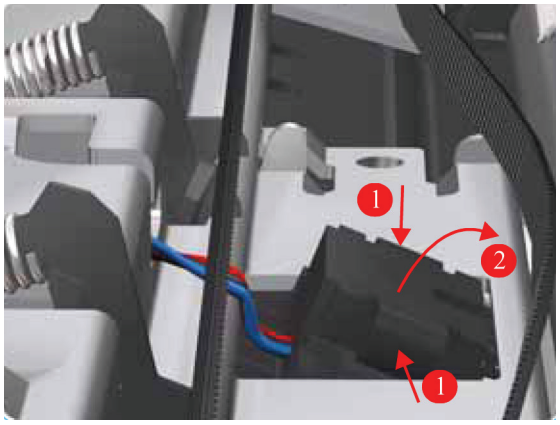

5. Release ALL the Pinch Springs from the Pinch Assembly.

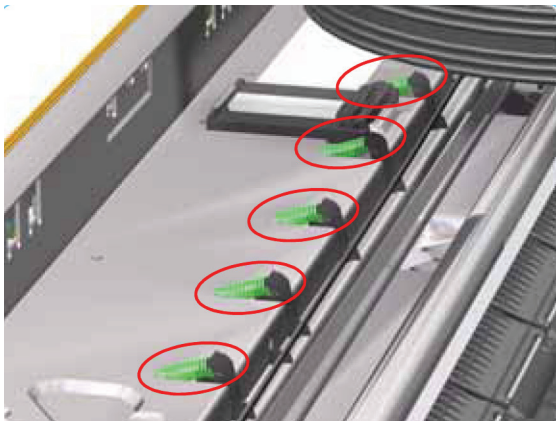

6. Release the Out-of-Paper Sensor cable that is looped underneath the Pinch Assembly.

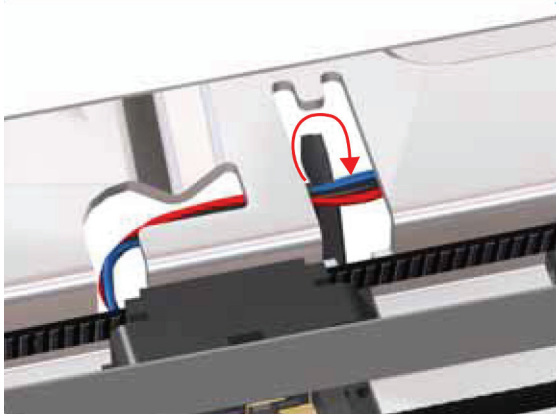

7. Working from the rear, pull out the Pinch Assembly from the Printer.

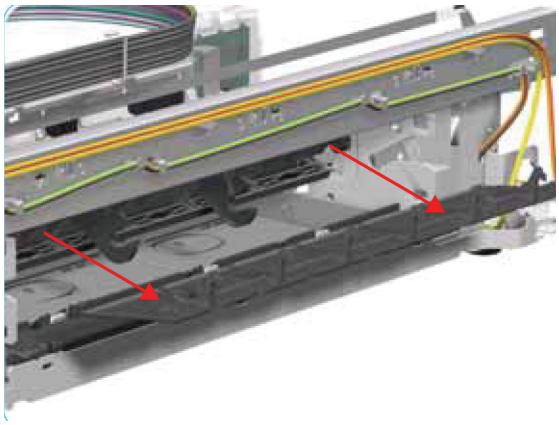

NOTE: After removing or replacing the Pinch Assembly, make sure that you perform the PRS Adjustment procedure.

Lower Paper Guide (Applicability: 30, 30n)

Removal

NOTE: Switch off the product and remove the power cable.

1. Remove the Cleanout Assembly ⇒Cleanout Assembly on page 120.
2. Remove the Pick Assembly ⇒Pick Assembly (Applicability: 30, 30n) on page 145.

3. Release the tabs that secure the Lower Paper Guide (use a flat blade screwdriver to help you if necessary).

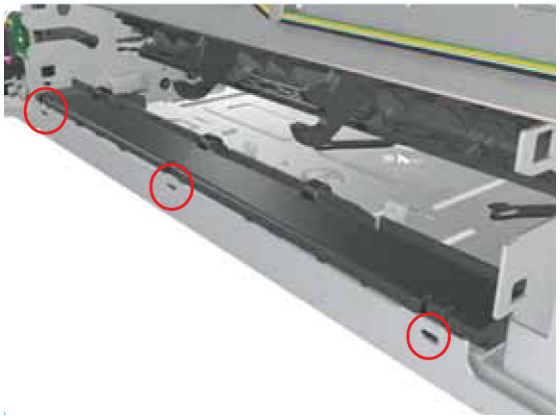

4. Remove the Lower Paper Guide from the Printer.

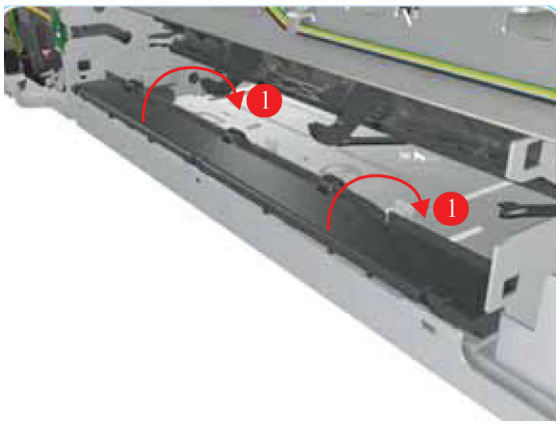

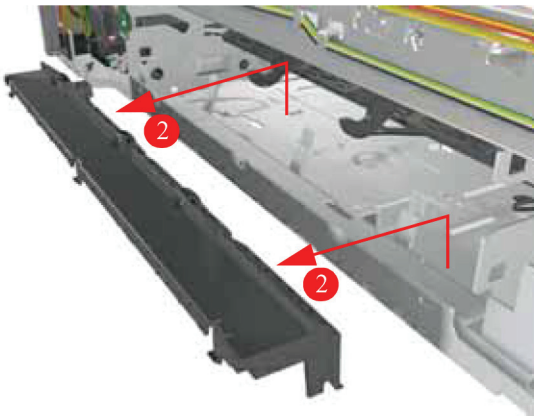

Inner Paper Guide (Applicability: 30, 30n)

Removal

NOTE: Switch off the product and remove the power cable.

1. Remove the Cleanout Assembly ⇒Cleanout Assembly on page 120.
2. Remove the Pick Assembly ⇒Pick Assembly (Applicability: 30, 30n) on page 145.

3. Release the locating pins on the left hand side (looking from the rear) by pushing the Inner Paper Guide to the right and then removing it from the Printer.

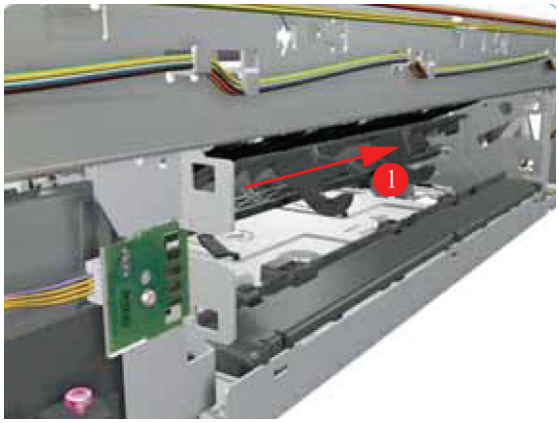

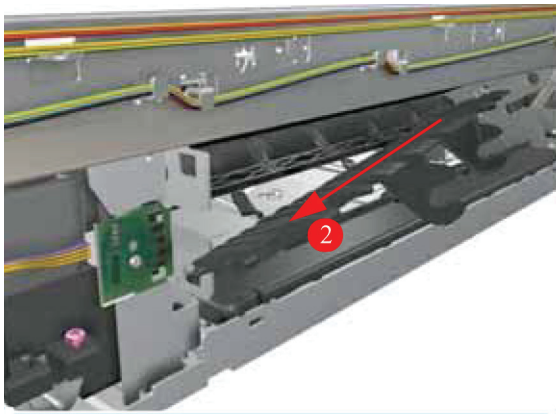

Inner Paper Guide

Not applicable to 30, 30n

Removal

NOTE: Switch off the product and remove the power cable.

1. Remove the Cleanout Assembly ⇒ Cleanout Assembly on page 120.
2. Remove the Top Cover ⇒Top Cover on page 98.
3. Remove the Center Cover ⇒Center Cover on page 99
4. Remove the Right End Cover ⇒Right End Cover on page 101.
5. Remove the Left End Cover ⇒Left End Cover on page 103.
6. Remove the Electronics Module ⇒Electronics Module on page 109.
7. Remove the Power Supply Unit ⇒Power Supply Unit on page 112.
8. Remove the Service Station ⇒Service Station on page 114.
9. Remove the Encoder Strip ⇒Encoder Strip on page 118.
10. Remove the Ink Supply Tubes ⇒Ink Supply Tubes on page 121.
11. Remove the Carriage Assembly ⇒Carriage Assembly (Applicability: 70, 100+, 110+, 111) on page 123

12. Remove the Pick Assembly ⇒Pick Assembly on page 146.

13. Pull the Inner Paper Guide from the middle to release it from the Printer.

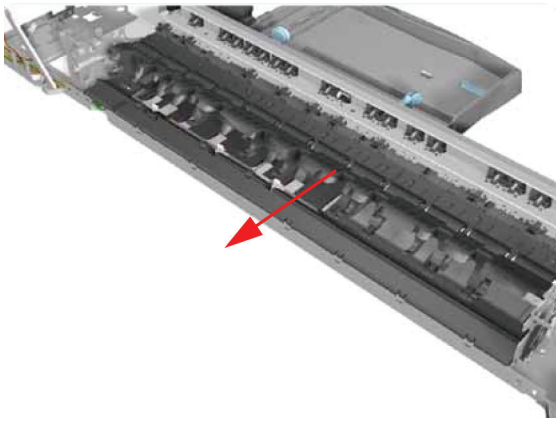

14. Remove both pieces of the Inner Paper Guide from the Printer.

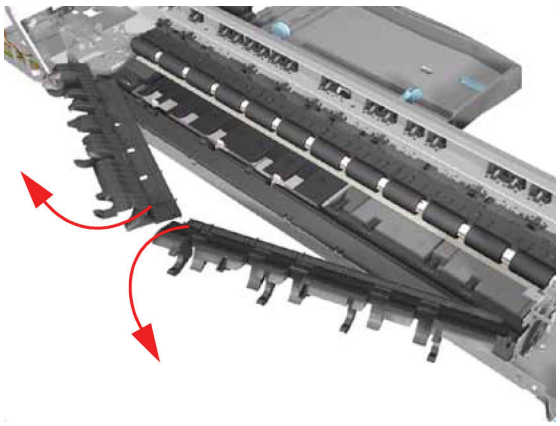

OOPS Sensor

Removal

NOTE: Switch off the product and remove the power cable.

1. Remove the Center Cover ⇒Center Cover on page 99.
2. Remove the Right End Cover ⇒Right End Cover on page 101.
3. Remove the Electronics Module ⇒Electronics Module on page 109.
4. Remove the Power Supply Unit ⇒Power Supply Unit on page 112.
5. Remove the Service Station ⇒Service Station on page 114.

6. Disconnect the OOPS Sensor Cable.

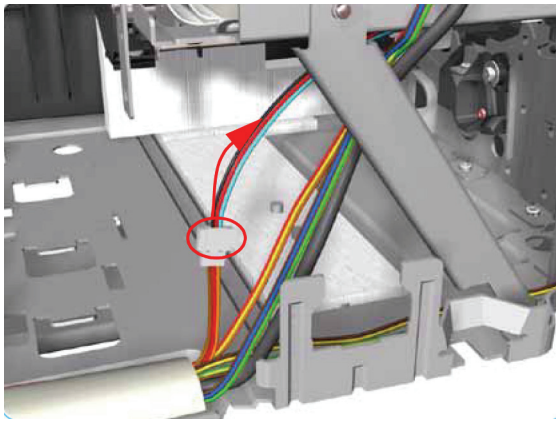

7. Remove the Spring that secures the OOPS Sensor.

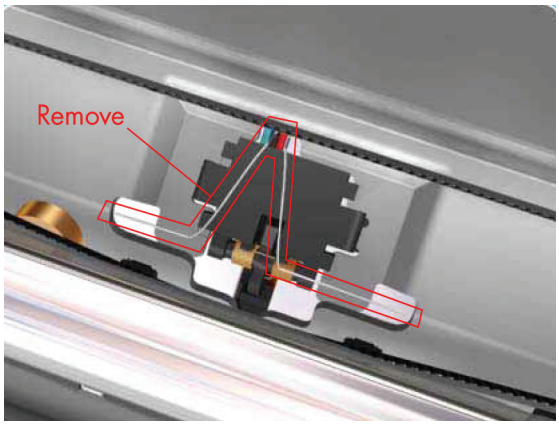

8. Press the OOPS Sensor clips inwards to release it.

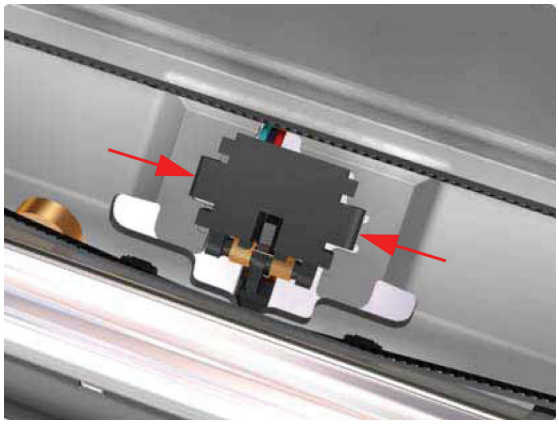

9. Remove the OOPS Sensor (including the cable) from the Printer.

NOTE: Check if any Cable Ties need to be cut before removing the OOPS Sensor.

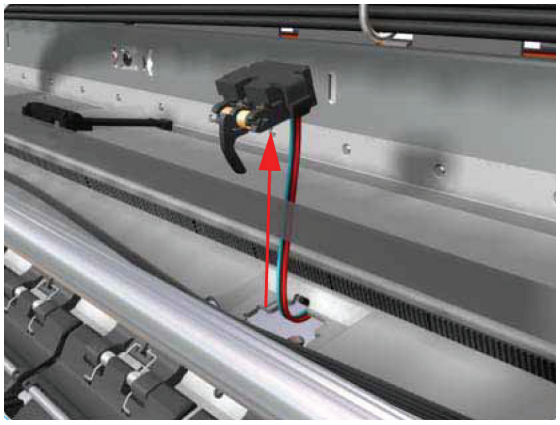

Paper-Axis Motor Drive Assembly (Applicable only to 30, 30n)

Removal

NOTE: Switch off the product and remove the power cable.

1. Remove the Center Cover Center Cover on page 99.
2. Remove the Left End Cover Left End Cover on page 103.
3. Disconnect the Paper-Axis and Encoder cables.

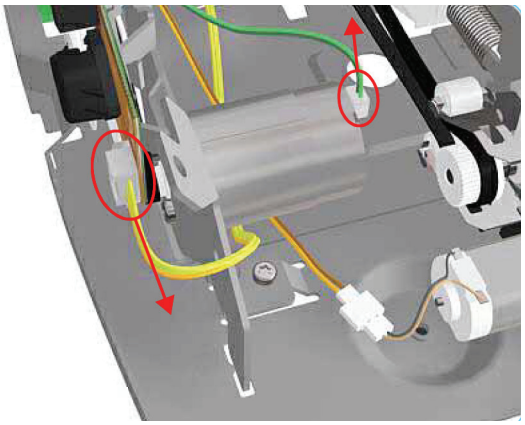

4. Remove one T-10 screw (**Type A**) that secures the Paper-Axis Motor Mount.

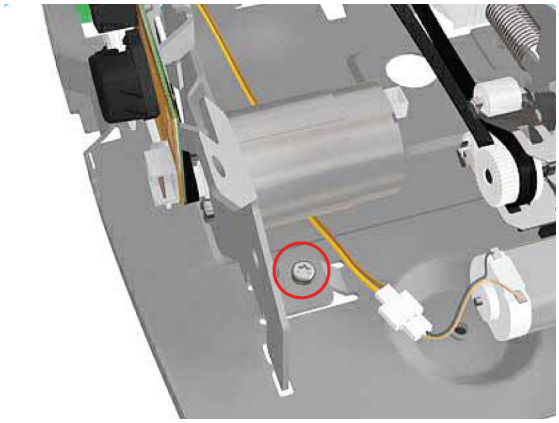

5. Release the locking mechanism that secures the Paper-Axis Motor Mount.

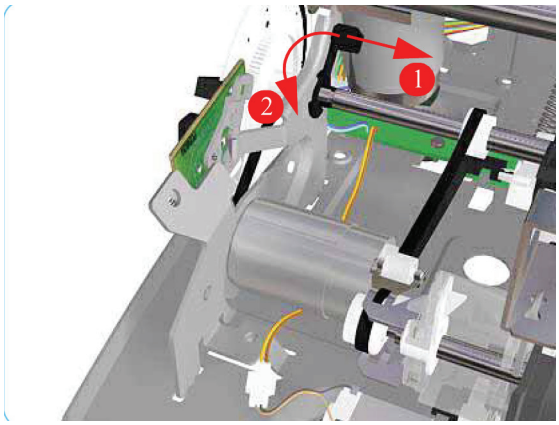

6. Remove the Paper-Axis Motor Assembly from the Printer.

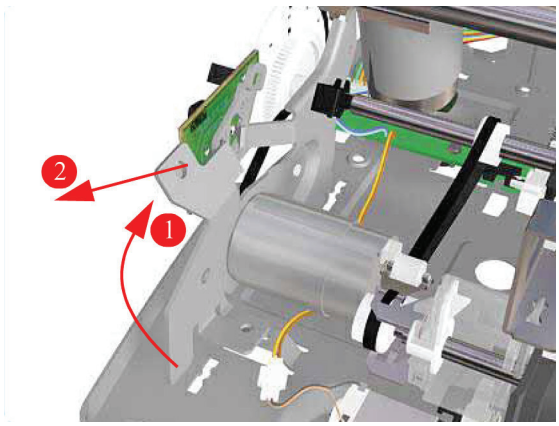

NOTE: After removing or replacing the Paper-Axis Motor Assembly, make sure that you perform the Accuracy Calibration.

Paper-Axis Motor Assembly (Applicability: 90, 90r, 130, 130nr)

Removal

NOTE: Switch off the product and remove the power cable.

1. Remove the Center Cover ⇒Center Cover on page 99.
2. Remove the Left End Cover ⇒Left End Cover on page 103.
3. Remove two T-10 screws that secure the Paper-Axis Motor Assembly.

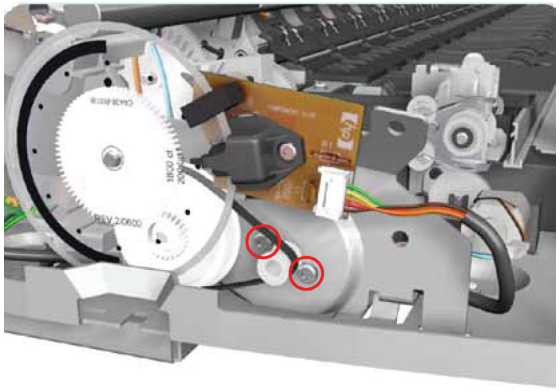

4. Disconnect the Paper-Axis Motor cable.

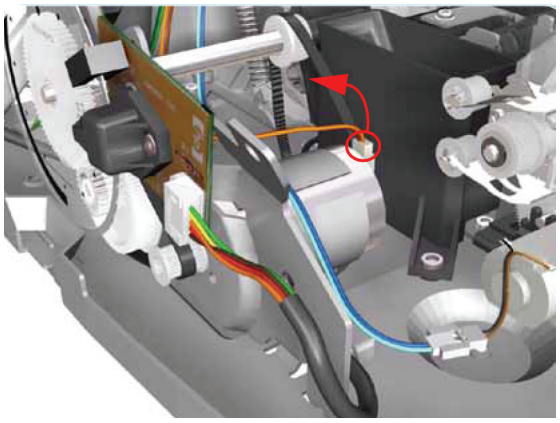

5. Disconnect the Paper-Axis Motor cable.

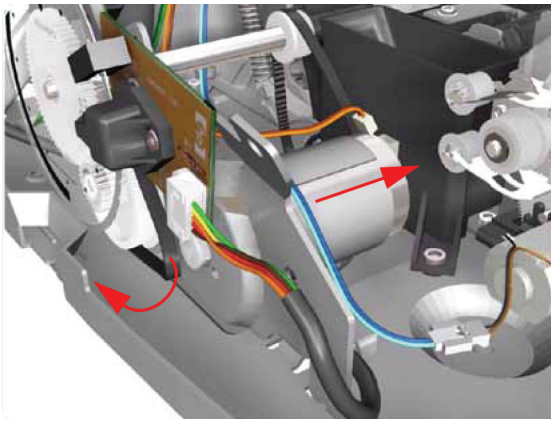

Bypass Platen (Applicability: 90, 90r, 130, 130nr)

Removal

NOTE: Switch off the product and remove the power cable.

1. Remove the Cleanout Assembly ⇒ Cleanout Assembly on page 120.
2. Remove the Top Cover ⇒Top Cover on page 98.
3. Remove the Center Cover ⇒Center Cover on page 99.
4. Remove the Right End Cover ⇒Right End Cover on page 101.
5. Remove the Left End Cover ⇒Left End Cover on page 103.
6. Remove the Electronics Module ⇒Electronics Module on page 109.
7. Remove the Power Supply Unit ⇒Power Supply Unit on page 112v.
8. Remove the Service Station ⇒Service Station on page 114.
9. Remove the Encoder Strip ⇒Encoder Strip on page 118.
10. Remove the Ink Supply Tubes ⇒Ink Supply Tubes on page 121.
11. Remove the Carriage Assembly ⇒Carriage Assembly (Applicability: 70, 100+, 110+, 111) on page 123.
12. Remove the Starwheel Assembly ⇒Starwheel Assembly on page 130.
13. Remove the Print Platen Assembly ⇒Print Platen Assembly on page 131.
14. Remove the Pivot Assembly ⇒Pivot Assembly on page 138.
15. Remove the Feed Roller Assembly ⇒Feed Roller Assembly on page 141
16. Remove the Pick Assembly ⇒Pick Assembly on page 146.
17. Remove the Inner Paper Guide ⇒Inner Paper Guide on page 155.
18. Remove two T-10 screws that secure the Left Bracket to the Chassis.

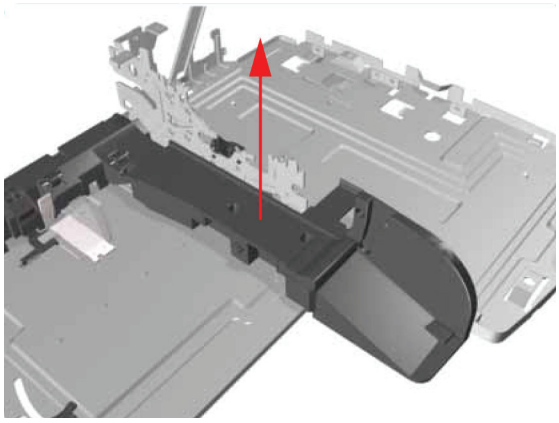

19. Slide the Left Bracket out of the Printer.

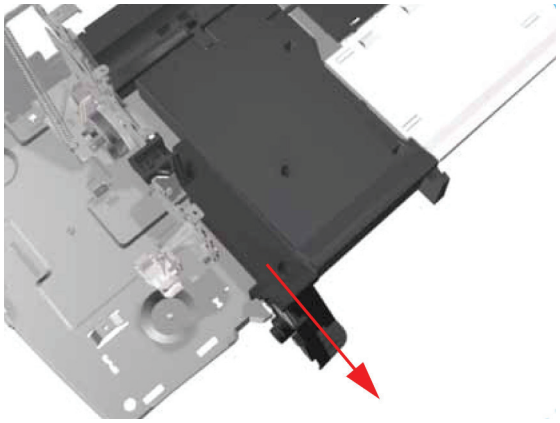

20. Remove one T-10 screw that secures the Side Guide to the Chassis.

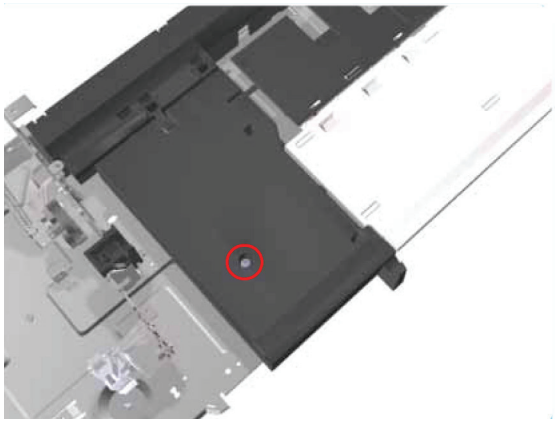

21. Raise the Side Guide and then slide it out to the left.

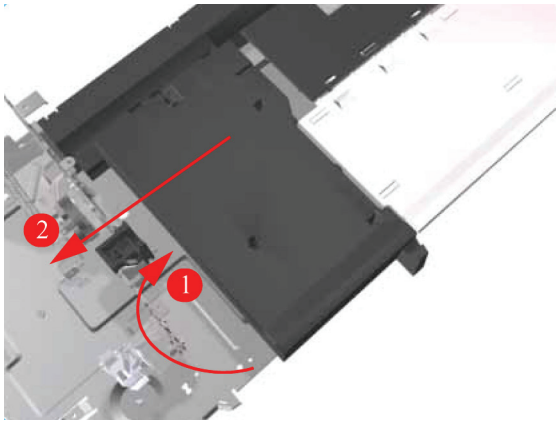

22. Slide the Bypass Platen to the left and remove from the Printer.

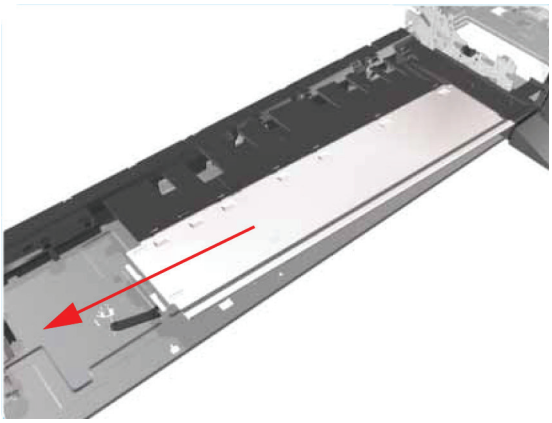

Bypass Platen Actuator (Applicability: 90, 90r, 130, 130nr)

Removal

NOTE: Switch off the product and remove the power cable.

1. Remove the Cleanout Assembly ⇒ Cleanout Assembly on page 120.
2. Remove the Top Cover ⇒Top Cover on page 98.
3. Remove the Center Cover ⇒Center Cover on page 99.
4. Remove the Right End Cover ⇒Right End Cover on page 101.
5. Remove the Left End Cover ⇒Left End Cover on page 103.
6. Remove the Electronics Module ⇒Electronics Module on page 109.
7. Remove the Power Supply Unit ⇒Power Supply Unit on page 112.
8. Remove the Service Station ⇒Service Station on page 114.
9. Remove the Encoder Strip ⇒Encoder Strip on page 118.
10. Remove the Ink Supply Tubes ⇒Ink Supply Tubes on page 121.
11. Remove the Carriage Assembly ⇒Carriage Assembly (Applicability: 70, 100+, 110+, 111) on page 123.
12. Remove the Starwheel Assembly ⇒Starwheel Assembly on page 130.
13. Remove the Print Platen Assembly ⇒Print Platen Assembly on page 131.
14. Remove the Pivot Assembly ⇒Pivot Assembly on page 138.
15. Remove the Feed Roller Assembly ⇒Feed Roller Assembly on page 141.
16. Remove the Pick Assembly ⇒Pick Assembly on page 146.
17. Remove the Inner Paper Guide ⇒Inner Paper Guide on page 155.
18. Remove the Bypass Platen ⇒Bypass Platen (Applicability: 90, 90r, 130, 130nr) on page 160.

19. Remove one T-10 screw that secures the Right Bracket to the Chassis.

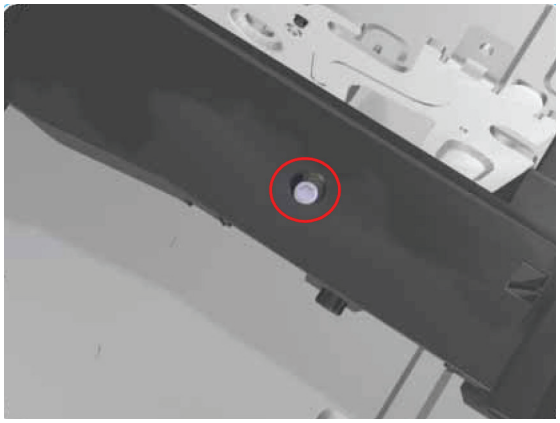

20. Lift the Right Bracket out of the Printer.

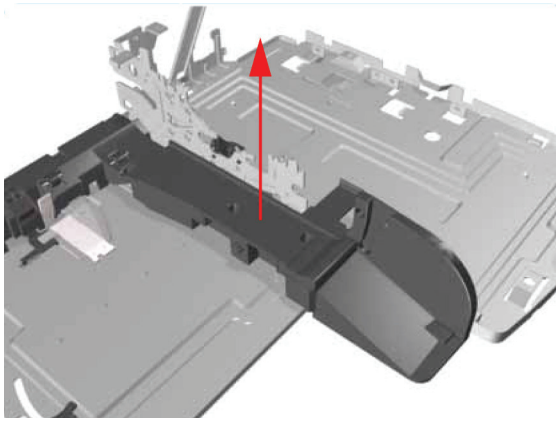

21. Release the Spring from the Bypass Platen Actuator.

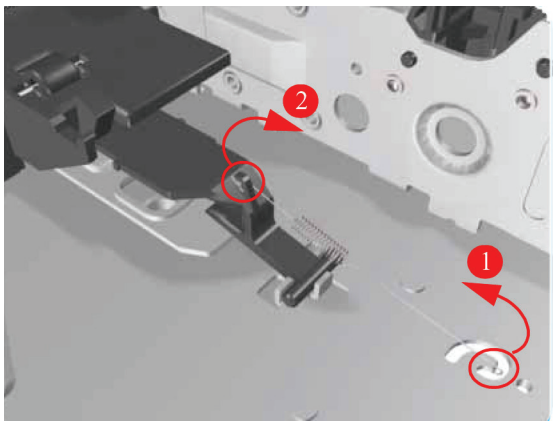

22. Remove the Bypass Platen Actuator from the Printer.

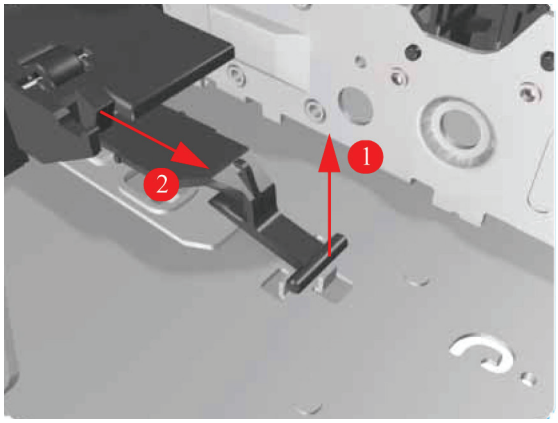

Output Platen (HP Designjet 111 with Roll)

Removal

1. From underneath the Output Tray, unclip the three retaining clips that hold the Output Tray in place.

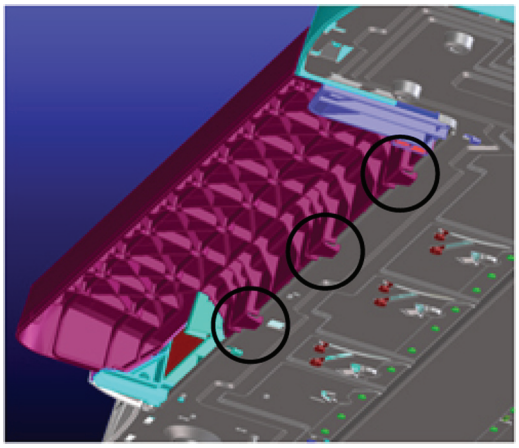

2. Remove the Output Tray from the printer.

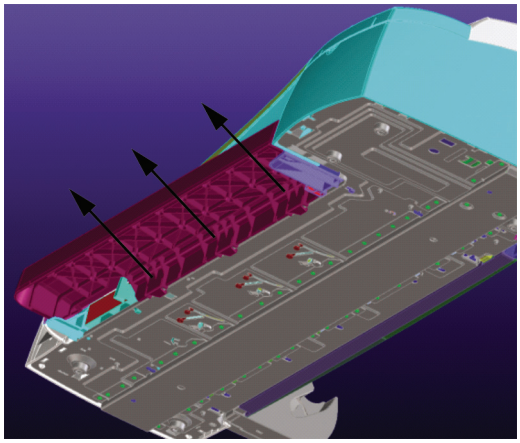

Installation

1. Insert the Output Tray into the front of the printer.

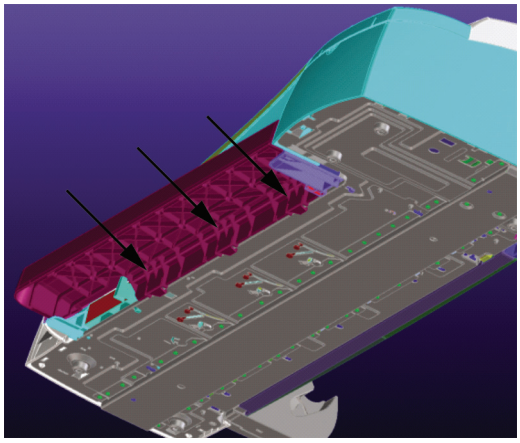

2. Ensure that each of the three clips located on the Output Tray are correctly latched to the printer

3. To check that the Output Tray is correctly installed, the underside of the Right Cover should be horizontally aligned with the Output Tray.

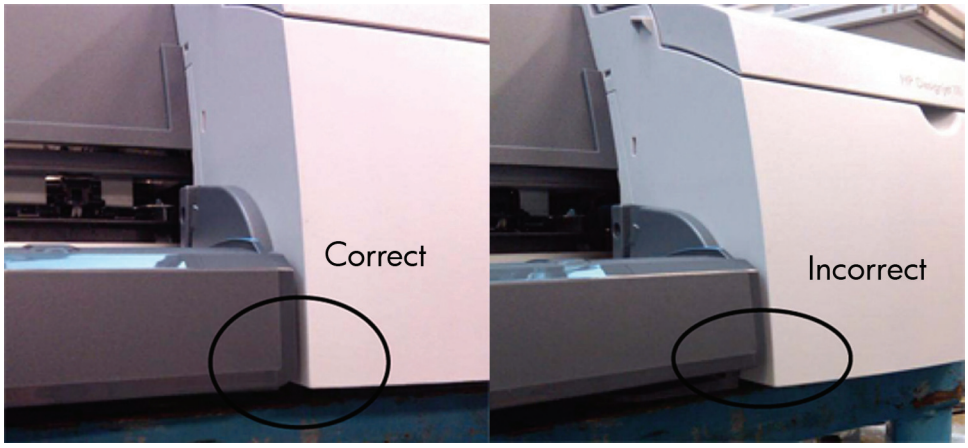

8 Maintenance

- Maintenance

Maintenance

Cleaning Information

IMPORTANT - Do NOT clean the following: Pinch Rollers, Drive Belt, Service Station (unless otherwise noted), Main PCA and other Electronic components such as Cables and Motors.

Case Parts: Use mild detergents such as PK 200 or Simple Green with water on a clean lint-free cloth. Solvents and water on a clean lint-free cloth can be used to remove stubborn stains on external case parts.

Paper Dust: It is recommended that vacuuming be used to remove paper dust from inside the printer. Do NOT use compressed air.

Carriage Flex-Contacts: Use water on a clean lint-free cloth.

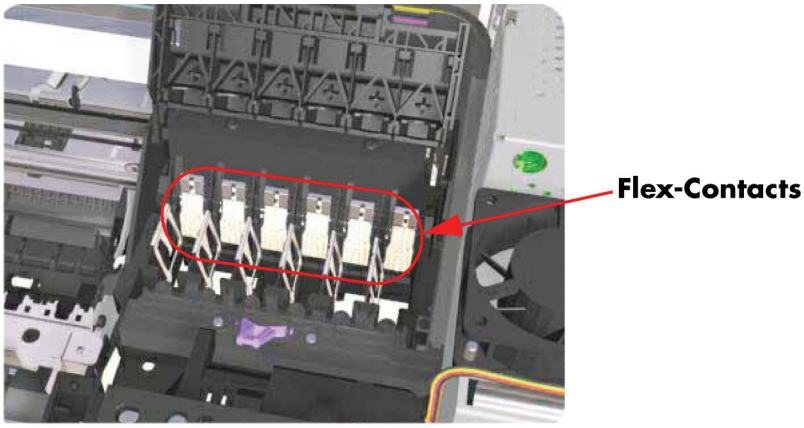

Carriage Rod: Cleaning is NOT recommended. If extremely dirty, wipe with a clean lint-free cloth. Do NOT use water or solvents.

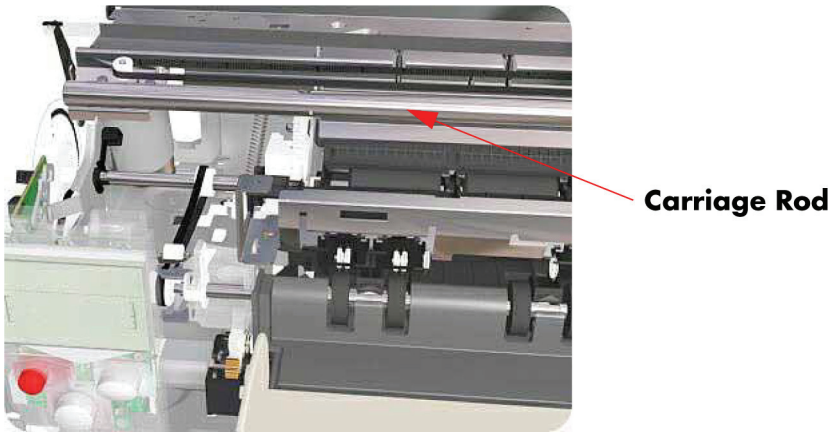

Encoder Strip: Wipe from left to right (viewed from front) with a clean lintfree cloth. Do NOT pull hard on the Encoder Strip.

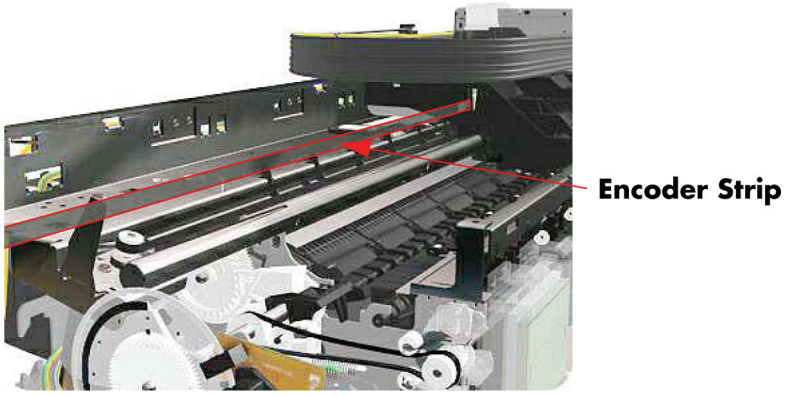

Drive Roller: Use water on a clean lint-free cloth. Do Not use solvents.

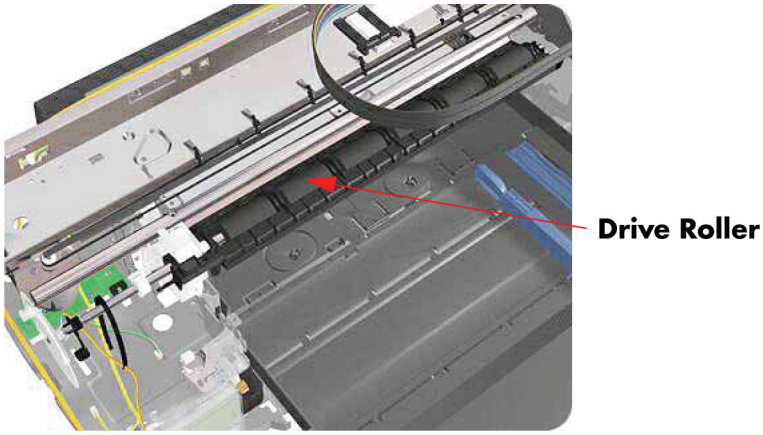

Backbone: Use water on a clean lint-free cloth. Dry carefully, parts left damp may rust.

Duplexer: Check for ink on connector to module. If ink is present, wipe clean with a clean lint-free cloth.

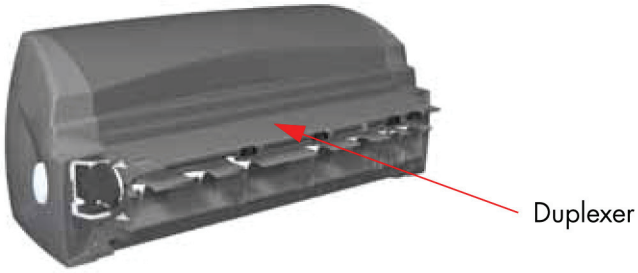

Lubrication Information

Lubrication: Cleaning the Carriage Rod is NOT recommended. If, however, the Carriage was wiped clean, replace the felt washers on the Carriage Assembly. The felt washers are impregnated with oil to provide the necessary lubrication for the Carriage Rod.

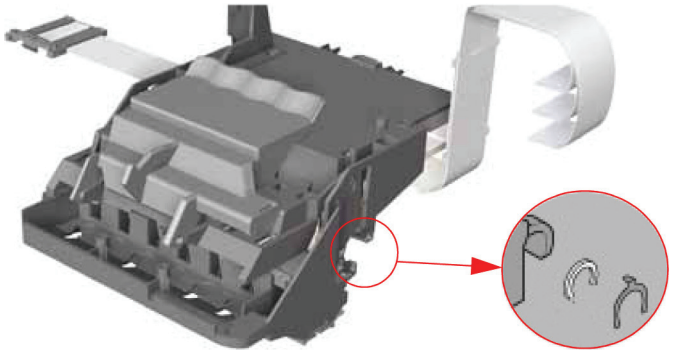

About this Edition

This is the 3rd edition of this Service Manual

1st edition March 2006

2nd edition August 2006

3rd edition March 2010

What's in this Service Manual

This manual contains information necessary to test, calibrate and service:

HP Designjet 30 Printer (Model C7790D)

HP Designjet 30n Printer (Model C7790E)

HP Designjet 70 Printer (Model Q6655A)

HP Designjet 90 Printer (Model Q6656A)

HP Designjet 90r Printer (Model Q6656B)

HP Designjet 100+ Printer (Model C7796C)

HP Designjet 110 Printer (Model C7796B)

HP Designjet 110+ Printer (Model C7796D)

HP Designjet 110+nr Printer (Model C7796E)

HP Designjet 130 Printer (Model C7791C)

HP Designjet 130nr Printer (Model C7791D)

HP Designjet 111 Printer, With Roll (Model CQ532A)

HP Designjet 111 Printer, With Tray (Model CQ533A)

For information about using these printers, refer to the corresponding User Guide.

The procedures described in this manual are to be performed by HP-qualified Service Personnel only.