MOTOROLA

Service Manual
Wartungsanleitung
Manuel de Réparation

HT800

146-162 MHz
157-174 MHz

Downloaded from: http://groups.yahoo.com/group/ht600e

SPECIFICATIONS

GENERAL

FREQUENCY RANGE: 146-174MHz

POWER SUPPLY: Nickel-Cadmium Battery

BATTERY DRAIN-

at 10VDC	(MD)H23	(MD)H33	(MD)H43
Standby:	*43mA	*43mA	*43mA
Receive:	*150mA	*150mA	*150mA
Transmit:	**555mA	**775mA	**1600mA

*Add 8mA with Remote Antenna
**Add 25mA with Remote Antenna

DIMENSIONS:

WIDTH:	66.8mm	(2.63")
DEPTH:	35.3mm	(1.39")

HEIGHT:

Radio Only	99.0mm	(3.90")
Radio with Battery		
Medium Capacity	161.3mm	(6.35")
High Capacity	177.3mm	(6.98")

WEIGHT:

Radio Only	383 g	(13.5 oz)
Radio with Battery (Nickel-Cadmium)		
Medium Capacity	612 g	(21.6 oz)
High Capacity	684 g	(24.1 oz)

TRANSMITTER

RF OUTPUT- Nickel-cadmium battery:	**(MD)H23** 1.0W at 10Vdc	**(MD)H33** 2.0W at 10Vdc	**(MD)H43** 5.0W at 10Vdc

MODULATION:
Type 16F3:
For 25kHz channel spacing:
±5kHz for 100% modulation at 1000Hz (±4.0kHz min.);
For 20kHz channel spacing:
±4kHz for 100% modulation at 1000Hz (±3.2kHz min);
For 12.5kHz channel spacing:
±2.5kHz for 100% modulation at 1000Hz (±2.0kHz min.);
including PL modulation for PL models.

PL MODULATION:
25kHz Channel Spacing
±1kHz max ±500Hz min
20kHz Channel Spacing
±800Hz max ±400Hz min
12.5kHz Channel Spacing
±500Hz max ±250Hz min

AUDIO DISTORTION: Meets CEPT requirements at rated audio

MAX. PERMISSIBLE CHANNEL SEPARATION: 6MHz (No degradation)

FREQUENCY STABILITY:
FROM -25°C to +55°C (+25°C ref.)
±.0005% (25/20kHz Channel Spacing)
±.0002% (12.5kHz Channel Spacing)

SPURIOUS & HARMONIC FREQUENCIES:
Less than: 0.25µW below 1GHz
1.0µW between 1GHz - 4GHz

FM NOISE:
At least 40dB below ±3.0kHz deviation at 1000Hz

RECEIVER

AUDIO OUTPUT- Less than 5% distortion at 1kHz into rated load

SECOND I-F FREQUENCY: 450kHz ± 1.5kHz measured at M1

SENSITIVITY: 0.40µV max. (12dB SINAD), 0.50µV max. (20dB SINAD psophemetrically weighted)

NOISE SQUELCH SENSITIVITY: Programmable

MAX. PERMISSIBLE CHANNEL SEPARATION: 6MHZ (No degradation)

FREQUENCY STABILITY:
FROM -25°C TO +55°C (+25°C ref.)
±.0005% (25/20kHz Channel Spacing)
±.0002% (12.5kHz Channel Spacing)

USEABLE BANDWIDTH:
±5kHz (25kHz Channel Spacing)
±4kHz (20kHz Channel Spacing)
±2.5kHz (12.5kHz Channel Spacing)

SPURIOUS FREQUENCY REJECTION:
More than 70dB below carrier

IMAGE REJECTION:
More than 70dB below carrier

SELECTIVITY:
More than 70dB at ±20/25kHz
More than 60dB at ±12.5kHz

INTERMODULATION:
More than 70dB at adjacent channel

CHANNEL SPACING: 25/20/12.5kHz

Specifications Subject to Change Without Notice, and Assume CEPT '84 Test Methods Except as Noted
12.5kHz Specifications Reflect CEPT '84 Methods at -10°C to +55°C.

NOTE:
- ALL BATTERIES MUST BE CHARGED PRIOR TO USE.
- USE OF CHEMICALS (DETERGENTS, ALCOHOL, AEROSOL SPRAY, PETROLEUM PRODUCTS) MAY BE HARMFUL AND DAMAGE THE RADIO HOUSING. WE RECOMMEND A MILD DISHWASHING SOAP FOR CLEANING THE EXTERIOR OF THE PRODUCT.
- O-RING SEALS MUST BE PROPERLY LUBRICATED AND ASSEMBLED TO INSURE CONFORMANCE TO MIL-810D SPECIFICATIONS FOR WATER INTRUSION.

Downloaded from: http://groups.yahoo.com/group/ht600e

COMPUTER SOFTWARE COPYRIGHTS

The Motorola products described in this manual may include copyrighted Motorola computer programs stored in semiconductor memories or other media. Laws in the United States and other countries preserve for Motorola certain exclusive rights for copyrighted computer programs, including the exclusive right to copy or reproduce in any form the copyrighted computer program. Accordingly, any copyrighted Motorola computer programs contained in the Motorola products described in this manual may not be copied or reproduced in any manner without the express written permission of Motorola. Furthermore, the purchase of Motorola products shall not be deemed to grant either directly or by implication, estoppel, or otherwise, any licence under the copyrights, patents or patent applications of Motorola, except for the normal non-exclusive, royalty free licence to use that arises by operation of law in the sale of a product.

Ⓜ, Motorola, Handie-Talkie, HT800, and Private-Line are trademarks of Motorola, Inc.

© 1988 by Motorola, Inc., Portable Products Division, 8000 W. Sunrise Blvd., Ft. Lauderdale, FL 33322-9947 Printed in U.S.A. 4/88

Downloaded from: http://groups.yahoo.com/group/ht600e

SAFETY INFORMATION

DO NOT hold the radio with the antenna close to, or touching, exposed parts of the body, especially the face or eyes, while transmitting. The radio will perform best if the microphone is five to eight centimeters away from the lips and the radio is vertical.

DO NOT hold the transmit (PTT) switch on when not actually desiring to transmit.

DO NOT allow children to play with any radio equipment containing a transmitter.

DO NOT operate a transmitter near unshielded electrical blasting caps or in an explosive atmosphere unless it is a type especially qualified for such use.

AEPF-17813

CMOS PRECAUTIONS

THIS RADIO CONTAINS STATIC-SENSITIVE DEVICES. DO NOT OPEN THE RADIO UNLESS PROPERLY EARTHED. TAKE THE FOLLOWING PRECAUTIONS WHEN WORKING ON THIS UNIT.

The red printed circuit boards indicate static sensitive devices are contained on these boards, and should be handled with the following precautions.

(1) Store and transport all CMOS devices in conductive material so that all exposed leads are shorted together. Do not insert CMOS devices into conventional plastic "snow" or plastic trays used for storage and transportation of other semiconductor devices.

(2) Ground the working surface of the service bench to protect the CMOS device. We recommend using the Motorola P/N 0180386A82 Static Protection Kit which includes a wrist strap, 2 ground cords, a table mat, and a floor mat.

(3) Wear a conductive wrist strap in series with a 1M resistor to ground. Replacement Wrist Straps that connect to the bench top covering - Motorola P/N RSX-4015B.

(4) Do not wear nylon clothing while handling CMOS devices.

(5) Neither insert nor remove CMOS devices with power applied. Check all power supplies to be used for testing CMOS devices and be certain there are no voltage transients present.

(6) When straightening CMOS pins, provide ground straps for apparatus used.

(7) When soldering, use a earthed soldering iron.

(8) If at all possible, handle CMOS devices by the package and not by the leads. Prior to touching the unit, touch an electrical ground to remove any static charge that you may have accumulated. The package and substrate may be electrically common. If so, the reaction of a discharge to the case would cause the same damage as touching the leads.

CAUTION

DO NOT DEPRESS THE PTT OR SIDE SWITCHES WHILE INSERTING THE FRAME INTO THE HOUSING; DAMAGE TO THE SWITCHES COULD OCCUR.

FOR REASSEMBLY, USE ONLY THE TOOLS THAT ARE RECOMMENDED. USING UNAUTHORISED TOOLS, IMPROPERLY USING AUTHORISED TOOLS, OR FAILING TO ADHERE TO TORQUE SPECIFICATIONS MAY CAUSE IRREPARABLE DAMAGE.

DO NOT ATTEMPT TO REMOVE THE ANTENNA BUSHING FROM THE CONTROL TOP; IT IS ULTRASONICALLY WELDED IN PLACE.

DO NOT DESOLDER OR RESOLDER ANY CONNECTIONS BETWEEN THE VOLUME POTENTIOMETER FLEX AND THE ON/OFF-VOLUME POTENTIOMETER (37) WITH THE SWITCH IN THE **OFF** POSITION. MAKE SURE THAT THE SWITCH IS IN THE **ON** POSITION BEFORE APPLYING ANY HEAT; OTHERWISE THE INTERNAL PARTS OF THE SWITCH WILL BE DAMAGED.

Downloaded from: http://groups.yahoo.com/group/ht600e

SERVICE AIDS

The following table lists tools and service aids recommended for working on the HT800. While all of these items are available from Motorola, most are standard shop equipment items, and any equivalent item capable of the same performance may be substituted for the item listed.

MOTOROLA PART NO.	DESCRIPTION	APPLICATION
RTK-4205A	RIB/Radio/test set cable	Connects radio to RTX-4005B Test Box and RIB.
RTL-4226B	Battery Eliminator	Interconnects radio to power supply.
15-8036B62	Battery Adapter	Connects radio to battery eliminator without main housing.
RTL-4234A	Controller Flex Extender Fixture	Eases in troubleshooting of controller flex and RF board.
01-80370B92	Controller Flex Hold Down Fixture	Provides secure mount for controller flex during servicing.
RTX-4005B or both RTX-4005A and RPX-4665A field modification kit	Portable Test Set	Enables connection to the universal Allows switching for radio testing.
1-80353A74	Radio Interface Box	Enables communications between the radio and the computer's serial communications adapter.
EPN-4041A	Wall-mounted Power Supply (220VAC)	Used to supply power to the RIB.
EPN-4040A	Wall-mounted Power Supply (240VAC)	Used to supply power to the RIB.
30-80369B71 or 30-80369B72	Computer Interface Cable	Use B72 for the IBM PC AT. All other IBM models use B71. Connects the computer's serial communications adapter to the RIB.
NKN6376A	Cloning Cable	Allows an HT800 radio to be duplicated from a master radio by transferring programmed data from one radio to another.
EVN-4101A	Programmer/Tuner Software	Software on 5-1/4" floppy disc.
EVN-4103A	Programmer/Tuner Software	Software on 3-1/2" floppy disc.
F.A.S.T. #9	"Using the RSX-4057A Desoldering Station"	How to use the RSX-4057A to successfully remove and replace surface mount devices.

Downloaded from: http://groups.yahoo.com/group/ht600e

RECOMMENDED TOOL LISTS

The following table lists the tools recommended for working on the HT800; these also are available from Motorola. Note that the RSX-4057A workstation requires the use of a specific "heat focus head" for each of the components on which this item is used. **Each of these heat focus heads must be ordered separately.** The individual heat focus heads (and the components on which they are used) are listed at the end of the table.

MOTOROLA PART NO.	DESCRIPTION	APPLICATION
RSX 4043A	Torque Screwdriver	Handle for bits listed below
66-80321B86	Phillips bit	Radio screws
55-0517E01	Hex socket bit	Volume and rotary switch nuts
66-80370B95	Spanner bit	Toggle switch spanner nut
66-05106N01	Tuning tool	Tunable coils and potentiometers
66-80387A59	Extractor, 2 contact	Removable of discrete surface mounted devices.
66-80387A64	Heat controller with safety stand, or	
01-80382A31	Portable desoldering unit	
66-80375A74	0.025 replacement tip, 5/pk	For 01-803282A31 portable desoldering unit
01-80386A81	Miniature digital readout soldering station (incl. 1/64" micropoint tip)	
01-80386A81	Illuminated magnifying glass with lens attachment	
01-80386A82	Anti-static grounding kit	Used during all radio assembly and disassembly procedures
66-84253C72	Straight prober	
66-80384A98	Brush	
10-10041A86	Solder (RMA type), 63/37,).20" diameter - 1 lb. spool	
10-80370B43	RMA liquid flux	
RSX-4057A	Surface mounted component - IC removal/rework station (order all heat focus heads separately)	Removal of surface-mounted integrated circuits
HEAT FOCUS HEADS	**INSIDE DIMENSIONS OF HEADS**	
66-80334B48	0.318"X0.318" for U402 & U403	
66-80334B49	0.410"X0.410" for U406	
66-80334B51	0.492"X0.492" for U401 & U405	

Downloaded from: http://groups.yahoo.com/group/ht600e

TORQUE AND TOOL SPECIFICATIONS CHART

DESCRIPTION	SIZE	PART NUMBER	QTY.	RETIGHTEN WITH RSX-4043A TORQUE SCREWDRIVER AND	TORQUE (IN.LB.)	TORQUE IN N/METER INT'L.	EXP. VIEW NUMBER
Control Top							
Antenna Bushing Spanner		0205765L02	1	6680370B90	12	1.36	22
Volume Pot Nut	0.75x8x1.6	0205629L01	1	5505717E01	5	0.57	17
Freq. Switch Nut	0.75x8x1.6	0205629L01	1	5505717E01	5	0.57	17
Toggle Switch Spanner		0205163Q01	1	6680370B95	4	0.45	19
Control Top Screw	4-40x3/16"	0300136785	1	6680321B79	5	0.57	6
Housing							
Battery Contact Screws	2-56x5/32"	0300139982	2	6680321B86	3	0.34	45
Bottom Front Cover Screws	2-56x1/4"	0300140041	2	6680321B86	3	0.34	87
Baseplate to Frame Screws	4-40 (captive)	0305941K01	2	6680321B79	5	0.57	49
Front Cover Post Screws	4-40x5/16"	0305137Q01	2	6680321B79	5	0.57	52
Controller							
Front Shield Screw	2-56x7/16"	0300140484	1	6680321B86	2	0.23	35
Bottom Screw	2-56x5/16"	0300138620	1	6680321B86	3	0.34	67
Controller to Frame Screws	2-56x1/8"	0300140369	4	6680321B86	2	0.23	35
RF Board							
Back Shield Screws	2-56x5/16"	0300136772	4	6680321B86	3	0.34	65
RF Board Screw	2-56x5/16"	0300136772	1	6680321B86	3	0.34	not shown
PA Heatsink to PCB (1-&2-W)	2/56x3/16"	0300136771	2	6680321B86	3	0.34	15
PA Heatsink to PCB (5-W)	2-56x3/16"	0300136771	1	6680321B86	3	0.34	15
PA to Heatsink (1-& 2-W)	2-56x5/32"	0300139685	1	6680321B86	3	0.34	101
PA to Heatsink Nut (5-W)	1/4"		1		5	0.57	not shown
Synthesiser Casting Screw	2-56x3/16"	0300136771	2	6680321B56	4	0.45	15
Front Cover							
Speaker/Mic Tab Screws	2-56x5/32"	0300139982	4	6680321B86	3	0.34	45

Downloaded from: http://groups.yahoo.com/group/ht600e

DISASSEMBLY PROCEDURE

REFER TO DISASSEMBLY ART ON PAGE 37 (FIG. 1)

1. Turn off the radio.
2. Remove the battery:
   While pushing the spring-loaded battery latch towards the top of the radio, slide the battery away from the latch, removing it from the baseplate on the bottom of the radio.
3. Remove the two screws from the back of the radio.
4. Remove the two screws on the bottom of the radio (baseplate corners).
5. Loosen the two captive screws on the bottom of the radio (middle of each end of baseplate). Do not completely remove the captive screws from the baseplate.
6. Lift the front cover from the radio housing being careful not to pull against the speaker/microphone wires.
7. Disconnect the speaker/microphone connector from the controller flex by grasping the microphone flex (near the plug) and pulling the plug straight out and away from the circuit board.
8. With a thumb and forefinger, grasp the antenna at its base and pull lightly to remove the frame assembly from the radio housing. Do not press the PTT switch during removal.

CAUTION

REFER TO "CMOS" PRECAUTIONS, PART OF "SAFETY INFORMATION SECTION.

9. Remove the screw that secures the front shield.
10. Remove the front shield by pulling it straight out and away from the radio.
11. Remove the controller circuit as follows:
    (A) Remove the 4 screws (2 on each side) that secure the controller to the frame.

NOTE

Be careful to pull each connector straight out and away from the mating socket so as not to bend or break the connector pins.

    (B) Disconnect the 2 bottom flex connectors by carefully sliding them away from the bottom of the radio.
    (C) Lift the controller circuit (nearest the bottom of the radio) away from the radio just enough to gain access to the connector under the controller.
    (D) Disconnect the connector under the controller.
    (E) Disconnect the 2 connectors at the top of the controller.
    (F) Lift the controller totally away from the radio.

NOTE

Refer to the Exploded View Diagram if further disassembly is necessary.

12. Assemble the radio in the reverse order of disassembly, making certain:
    - to avoid damage to the flex circuits, connectors, and connector pins when reinserting the controller.
    - not to depress the PTT switch when sliding the circuit board back into the housing.

CAUTION

Inspect the frame O-ring and control head O-ring. Replace if obvious damage exists.

GENERAL

REFER TO ALIGNMENT LOCATIONS DIAGRAM ON PAGE 37 (FIG. 2)

THIS RADIO HAS BEEN FACTORY ALIGNED AND DOES NOT REQUIRE ANY ADJUSTMENTS. Realignment may be required if components are replaced or have aged, or if any transmitter/receiver frequencies are changed. If it is necessary to realign the radio, perform the following procedures:

1. When using the RTX-4005 test box, place the MP PL switch in the OFF position.
2. Remove the battery and front cover as described in the "DISASSEMBLY PROCEDURE."
3. Refer to the Test Set-Up Detail and connect the test equipment and Programmer/Tuner to the radio as illustrated.
4. Connect a dc power supply to the battery eliminator and attach the battery eliminator to the radio.
5. Adjust the power supply for 10.0Vdc. Set current limit to 2.0A.
6. Turn the radio off then on to reinitialise the radio.
7. Frequency Adjust (Synthesiser). Terminate the program/test cable (RTK-4205A), RF lines (pins 10 and 12), through a 30dB pad to a frequency counter or service monitor. Set the radio's frequency switch to any channel. Key the radio using the external PTT switch. Compare the frequency reading on the counter (or service monitor) to the customer frequency assigned to that channel. The frequency difference should be less than ±750Hz. Adjust R129 if the frequency difference is more than ±750Hz.
8. Perform either the "RECEIVER ALIGNMENT" procedure or "TRANSMITTER ALIGNMENT" procedure or both procedures as required.

Downloaded from: http://groups.yahoo.com/group/ht600e

TRANSMITTER ALIGNMENT

Review "GENERAL" information section before performing TRANSMITTER ALIGNMENT

Preliminary Adjustments:

1. Terminate the program/test cable (RTK4205A), rf lines (pins 10 and 12), to a power meter through a 30dB pad.
2. Make all measurements at the Program Test Cable (pins 10 and 12), with radio keyed through the external PTT switch.
3. Program new customer frequencies (if necessary).

STEP	ADJUST	FOR	USING	NOTE
1	Check power output on all channels. NOTE: You must dekey before changing channels for the synthesiser to change frequencies. Set the frequency switch to the channel with the lowest output power.			
2	C120 Trimmer Capacitor	Maximum power output with least current drain	RF Wattmeter and Ammeter	Reading should be greater than rated rf power output, with current drain less than 580mA (1-W Models), less than 800mA (2-Watt Models), or less than 1625mA (5-Watt Models). **Note:** Two possible peaks, choose peak with least current drain. Adjust from component side.
3	Check remaining channels	Same power and current readings obtained in STEP 2	RF Wattmeter and Ammeter	
4	Repeat steps 1 through 3 if necessary.			

Deviation Adjustment:

1. Terminate the program/test cable (RTK-4205A) through a 30dB pad to a service monitor (or deviation meter).
2. Place the **METER SELECTOR** switch on the RTX-4005 test box to the **MIC** position. Insert a 1kHz tone at the **AUDIO IN** port of the test box. Use an ac voltmeter to monitor the voltage at the **AC/DC METER** port of the test box. Using the PTT switch on the RTX-4005 box to key the radio, adjust the level of the 1kHz tone until 45mV is present at the **AC/METER** port. Dekey the radio.
3. Connect the program/test cable to the Radio Interface Box (RIB). Use the Programmer/Tuner to read the radio.
4. If the radio requires a change in frequency or options, make the appropriate changes to the personality file and program the radio.
5. Enter the **RADIO ALIGNMENT** and **SERVICE AIDS** menu from the main menu. Select the **TUNE CHANNEL** option.
6. Set the frequency switch on the radio's control top for the channel to be adjusted.
7. Proceed to the **VCO MODULATION LEVEL** position of the **TUNE CHANNEL** screen.
8. Press and hold down the PTT switch on the RTX-4005 to continuously key the radio.
9. Press the ± keys to tune for a peak deviation as shown in the table below for the radio's appropriate channel spacing.
10. Release the PTT switch on the RTX-4005 to dekey the radio.
11. Proceed to the **REF OSCILLATOR LEVEL** position of the **TUNE CHANNEL** screen.
12. Disconnect the 1kHz tone from the **AUDIO IN** port of the RTX-4005.
13. Press and hold down the PTT switch on the RTX-4005 to continuously key the radio.
14. Press the ± keys to tune for a peak deviation as shown in the following table for the radio's appropriate channel spacing.
15. Release the PTT switch on the RTX-4005 to dekey the radio.
16. Reconnect the 1kHz tone to the **AUDIO IN** port of the RTX-4005.
17. Repeat steps 6-16 for all channels to be tuned.
18. Exit from the **TUNE CHANNEL** menu and program the radio.
19. With the 1kHz tone applied, check the total transmit deviation to the range shown in the following table. Repeat the above procedure to retune any of the channels if necessary.
20. The programmer disables normal transmit (5-tone or PL encode) while on the **REF OSCILLATOR LEVEL** operation, and forces the radio to encode 30Hz PL regardless of radio settings.
21. If any changes to the deviation levels were necessary, the radio must be reprogrammed.

Downloaded from: http://groups.yahoo.com/group/ht600e

CH SPACING	VCO MODULATION STEP 9	VCO MODULATION STEP 19	REF MODULATION STEP 14
25kHz	4.5-4.8kHz	4-5kHz	670-730Hz
20kHz	3.5-3.8kHz	3.2-4kHz	590-650Hz
12.5kHz	2.25-2.40kHz	2-2.5kHz	300-350Hz

NOTE

While in the TUNE CHANNEL Screen, changes to the deviation settings are made in the radio's RAM. If the radio is dekeyed during the deviation adjustment, the radio's original information will be returned to RAM. To place the programmer settings back into RAM, press either the ENTER, +, or - key.

Deviation Adjustment DTMF Radios:

1. Follow the deviation procedure detailed above, but in step 14, adjust for the VCO MODULATION LEVEL as shown in the table below for the radio's appropriate channel spacing.
2. Press the number **1** key on the DTMF pad and continuously key the radio using the radio's PTT switch. Adjust R709 for the deviation defined in the table below for the radio's appropriate channel spacing.

CH. SPACING	STEP 1	STEP 2
25kHz	4.7-4.9kHz	3.0-3.2kHz
20kHz	3.7-3.9kHz	2.4-2.6kHz
12.5kHz	2.35-2.45kHz	1.5-1.7kHz

NOTE

DTMF memory is volatile. If the battery is left off for more than 2 minutes the memory will be erased.

RECEIVER ALIGNMENT

Preliminary Adjustments:

1. The receiver is factory tuned to operate over the entire bandsplit and should not need retuning. Perform the "Receiver Check" to determine if "RECEIVER ALIGNMENT" (tuning any portion of the receiver) is necessary.
2. Connect the program/test cable (RTK-4205A) to the Radio Interface Box (RIB). Use the Programmer/Tuner to read the radio.
3. Enter the Per Radio menu in the Programmer/Tuner. Disable the battery saver by pressing the space bar. Exit from the Per Radio menu, and then program the radio.
4. When using the RTX-4005 test box, place the **AUDIO OUT** switch in the **B** position to set for proper speaker loading. Place the meter selector in the **AUDIO PA** position for receiver tests.
5. Connect the rf cable of the test cable to an rf generator or service monitor.

Receiver Check:

1. Use the Programmer/Tuner to program for new customer frequencies, if necessary.
2. Set the rf generator (or service monitor) for the appropriate frequency at a 1mV level with a 1kHz tone modulated at 3kHz deviation.
3. Connect the **AC/DC METER** port of the RTX-4005 to an ac voltmeter. Adjust the volume potentiometer (R140) for an ac voltmeter reading of 4.47Vrms.
4. Connect a SINAD meter to the **AC/DC METER** port of the RTX-4005.
5. Reduce the rf level until 12dB of SINAD is obtained; record the rf level reading. Depress the monitor button while taking this measurement to ensure that the radio is not squelched. Also temporarily disconnect the test cable from the RIB to ensure that computer noise does not affect the measurement.
6. Perform SINAD measurements on all channels.
7. If the rf level required to produce 12dB SINAD is 0.40V or less, *DO NOT REALIGN THE RECEIVER*; instead, proceed directly to "Squelch Sensitivity/Check Adjustment." If the rf level required to produce 12dB SINAD is greater than 0.25µV, perform the "Receiver Alignment."

Downloaded from: http://groups.yahoo.com/group/ht600e

Receiver Alignment (Back End):

DO NOT PERFORM RECEIVER ALIGNMENT UNTIL THE "RECEIVER CHECK" HAS BEEN PERFORMED.

NOTE

The receiver back end coils L6, L7, and L8, and the receiver front end coils L1, L3, L4 and L5 are factory tuned to cover the entire bandsplit and should not need retuning. Should the rf amp, mixer, crystal filters, i-f module, or accompanying parts need replacing, it may be necessary to perform the following tuning procedure:

Receiver Alignment (Back End):

1. Remove the radio from its housing as described in the "DISASSEMBLY PROCEDURE," then remove the backplane shield (exploded view item #74).
2. Attach the battery adapter to the radio frame, then attach the battery eliminator to the battery adapter.
3. Selecting any one of the customer frequencies, adjust the rf generator or service monitor for the appropriate frequency. Then, place the radio front side down so that the solder side (side 2) of the PC board is facing up.
4. Tune coils L6, L7, and L8 flush with the solder side of the PC board.
5. With an ac voltmeter, monitor M1 on the solder side of the PC board. Set the ac voltmeter to the -40dB scale, and adjust the rf level so that the voltage can be monitored at M1. During the following procedure, adjust the rf level to keep the ac voltage at M1 within the -40dB scale.
6. Peak coils L6, L7, and L8 (in that order) for maximum ac voltage at M1.
7. Perform the "Receiver Check" procedure, then repeat steps 4-6 of the "Back End" procedure, if necessary.

NOTE

Perform the following procedure only if the radio fails the "Receiver Check," and the receiver back end alignment has been performed. The radio should already be removed from the housing.

Narrow bandwidth (6MHz or less)

8. Tune coils L1, and L3 through L8 flush with the solder side (size 2) of the PC board.
9. Set the radio to the highest customer receive frequency, then adjust the rf generator or service monitor for the appropriate frequency.
10. With an ac voltmeter, monitor M1 on the controller flex. Set the ac voltmeter to the -40dB scale and adjust the rf level so that the ac voltage can be read at M1. During the following procedure, adjust the rf level to keep the ac voltage at M1 within the -40dB scale.
11. Adjust L3, then L5 for the maximum ac voltage level at M1.
12. Set the radio the the lowest customer receive frequency, then adjust the rf generator or service monitor to the appropriate frequency and level.
13. Adjust L4, then L1 for the maximum ac voltage level at M1.
14. Perform the "Receiver Alignment (Back End)" procedure and then the "Receiver Check."

Downloaded from: http://groups.yahoo.com/group/ht600e

Wide Bandwidth (Greater than 6MHz)

15. Tune coils L1, and L3 through L8 flush with the solder side (side 2) of the PC board.
16. Use the Programmer/Tuner to program the receiver frequency for 158.125 ±0.1MHz for mid split radios (146-162MHz), or 170.125 ±0.1MHz for high split radios (157-174MHz). If interference is present, program for a receive frequency as close to the desired frequency as possible.
17. Adjust L3, then L5 for the maximum ac voltage level at M1. Select the peak where the slugs of the coils are closest to the solder side of the PC board.
18. Use the Programmer/Tuner to program the receiver frequency for 161.975 ±0.1MHz for mid split radios (146-162MHz), or 173.975 ±0.1MHz for high split radios (157-174MHz).
19. Adjust L4 for the maximum ac voltage level at M1. Select the peak where the slug of the coil is closest to the solder side of the PC board.
20. Use the Programmer/Tuner to program the receiver frequency for 146.125 ±MHz for mid split radios (146-162MHz), or 157.125 ±0.1MHz for high split radios (157-174MHz).
21. Adjust L1 for the maximum ac voltage level at M1. Select the second peak where the slug of the coil is farthest from the solder side of the PC board.
22. Program the radio back to the original customer receiver frequencies.
23. Perform the "Receiver Alignment (Back End)" procedure and then the "Receiver Check."

Squelch Sensitivity Check/Adjustment:

1. Use the Programmer/Tuner to read the radio, then proceed to the **RADIO ALIGNMENT** and **SERVICE AIDS** menu from the main menu. Next, select the **TUNE RADIO** operation.
2. Set the frequency switch for the channel determined to have the poorest sensitivity on the "Receiver Check." Place the decode select switch to the carrier squelch positon.
3. Connect an ac voltmeter to the **AC/DC METER** port of the RTX-4005.
4. Set the rf generator or service monitor for the appropriate frequency and no modulation. Reduce the rf level to a minimum, then turn the rf off.
5. Depress the monitor button on the side of the radio and adjust the noise level for 2.2Vrms. Make a note of the level on the dB scale. This will be the reference level for quieting measurements.
6. Proceed to the **TONE SQUELCH** position in the **TUNE RADIO** screen.
7. Turn the rf of the generator or service monitor on at the minimum possible level. Increase the rf level until squelch break occurs. Note the quieting level at squelch break. If squelch break occurs between 6 and 12dB of quieting proceed directly to the carrier squelch check in step 10. If the quieting level is not within the 6 to 12dB range, continue on with step 8.
8. Press the ± keys to adjust the tone squelch setting to 0. Adjust the rf level for 6dB of quieting.
9. Holding the rf level constant, press the + key to increment the tone squelch setting one step at a time until the radio squelches. This will be the tone squelch setting.
10. Reduce the rf level to minimum and turn the rf off. The radio should be squelched.
11. Proceed to the **CARRIER SQUELCH** position in the **TUNE RADIO** screen.
12. Turn the rf of the generator or monitor on at the minimum possible level. Increase the rf level until squelch break occurs. Note the quieting level at squelch break. If squelch break occurs between 8 and 14dB of quieting proceed directly to step 15. If the quieting level is not within the 8 to 14 dB range, continue with step 13.
13. Press the ± keys to adjust the carrier squelch setting to 0. Adjust the rf level for 8dB of quieting.
14. Holding the rf level constant, press the + key to increment the carrier squelch setting one step at a time until the radio squelches. This will be the carrier squelch setting.
15. Exit from the **RADIO ALIGNMENT** and **SERVICE AIDS** menu.
16. If the squelch settings required modification, program the radio.

Downloaded from: http://groups.yahoo.com/group/ht600e

Cloning Procedure:

(The content of radio A is to be duplicated into radio B)

1. Connect the cloning cable (NKN6376A) to the Universal Connector of both radio A and radio B.
2. Turn off radio A and turn on radio B.
3. Place the decode select switch on radio A to the coded squelch position ( ) for partial cloning. Cloning will duplicate the content of radio A to radio B, except for the deviation and squelch settings.
4. Simultaneously depress the PTT and monitor button on radio A and hold.
5. Turn on radio A. The green LED on radio B will flash indicating cloning is in progress.
6. Cloning is complete once the green LED turns off and an alert tone is heard from radio B. Release both the PTT and monitor button on radio A.

Downloaded from: http://groups.yahoo.com/group/ht600e

DISASSEMBLY ART (FIGURE 1)

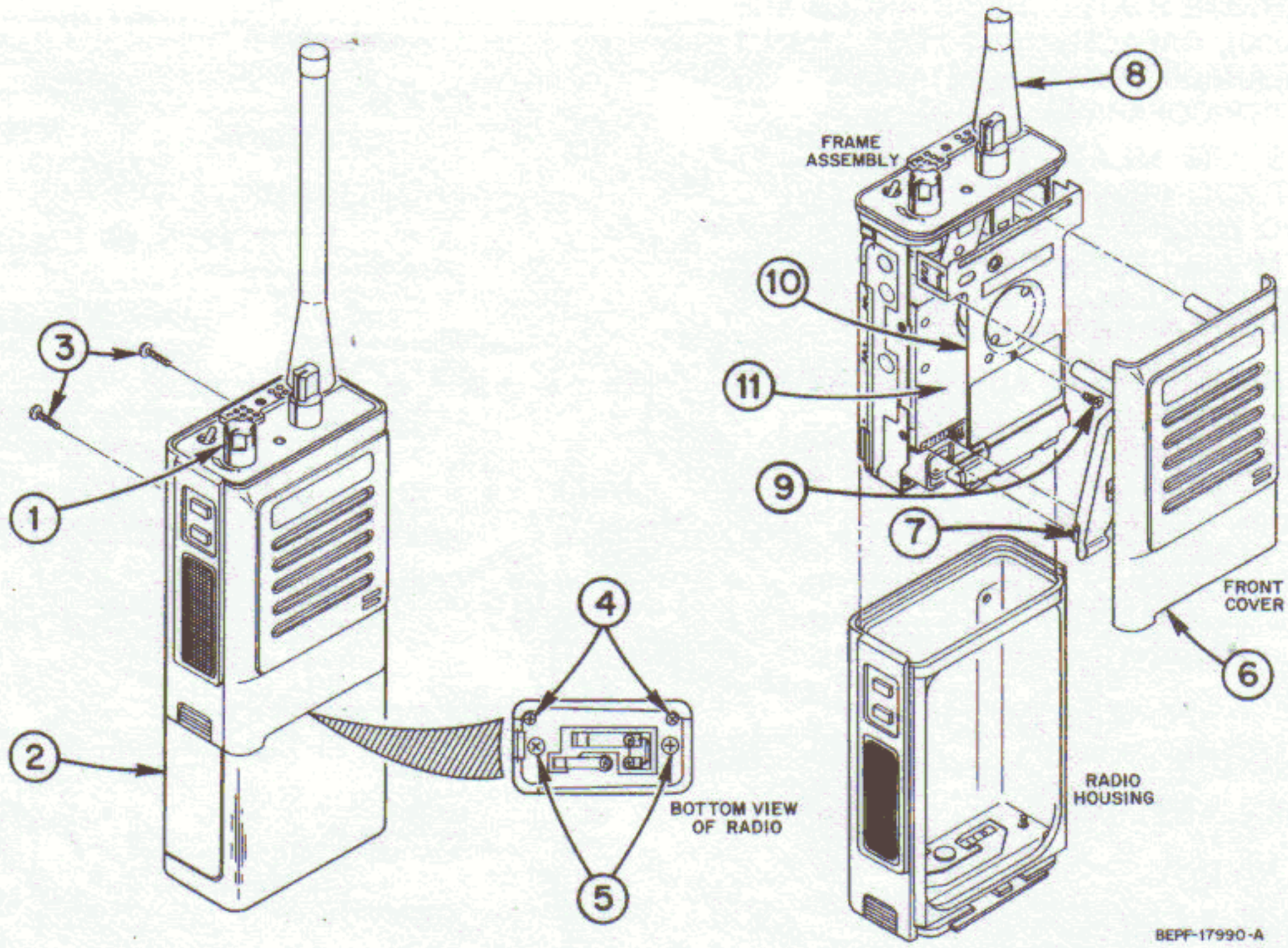

UNIVERSAL CONNECTOR DETAIL AND PIN NUMBER ASSIGNMENT

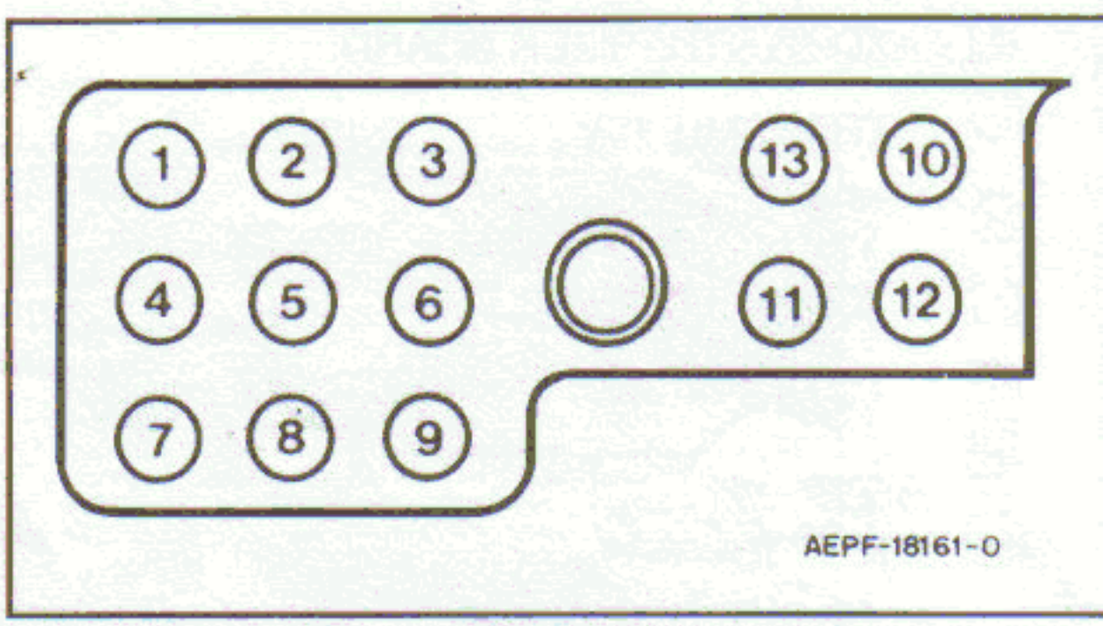

1	EXTERNAL MICROPHONE	7	EXTERNAL SPEAKER SELECT
2	EXTERNAL SPEAKER	8	SPEAKER COMMON
3	OPTION B +	9	BUSY
4	EXTERNAL PTT	10	REMOTE ANTENNA
5	GROUND (to Controller Board)	11	NOT USED
		12	RF GROUND (to Mother Board)
6	DATA	13	SENSE

TEST SET-UP DETAIL

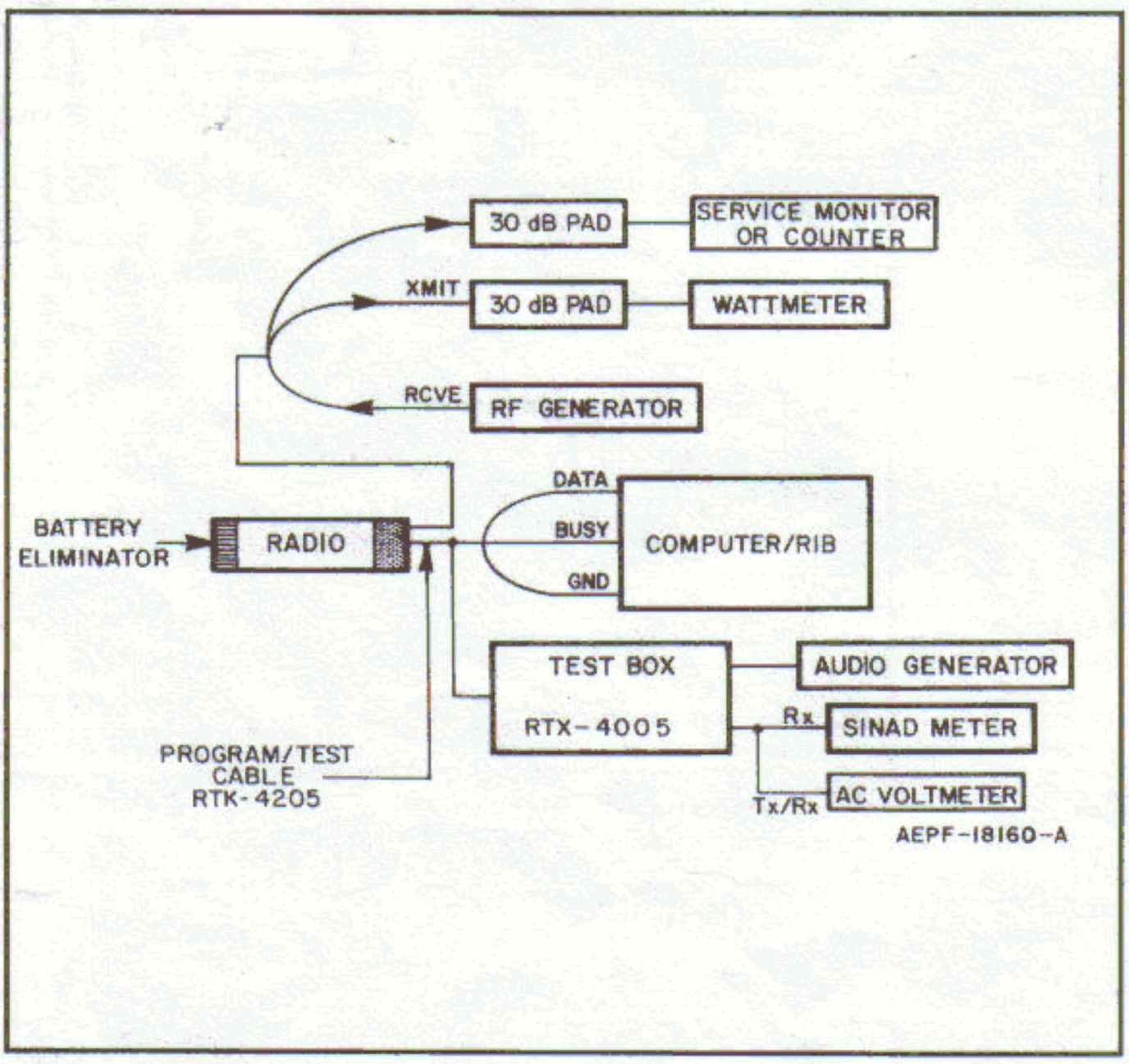

M1 METERING POINT LOCATION (CONTROLLER)

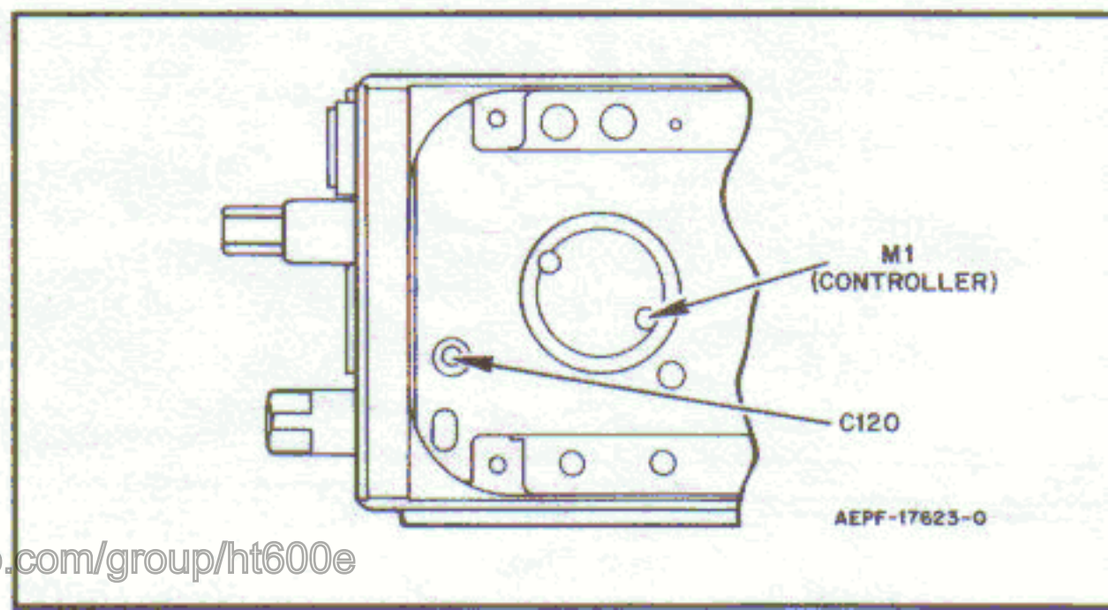

Downloaded from: http://groups.yahoo.com/group/ht600e

ALIGNMENT ADJUSTMENT LOCATIONS (FIGURE 2)
1- AND 2-WATT RADIOS

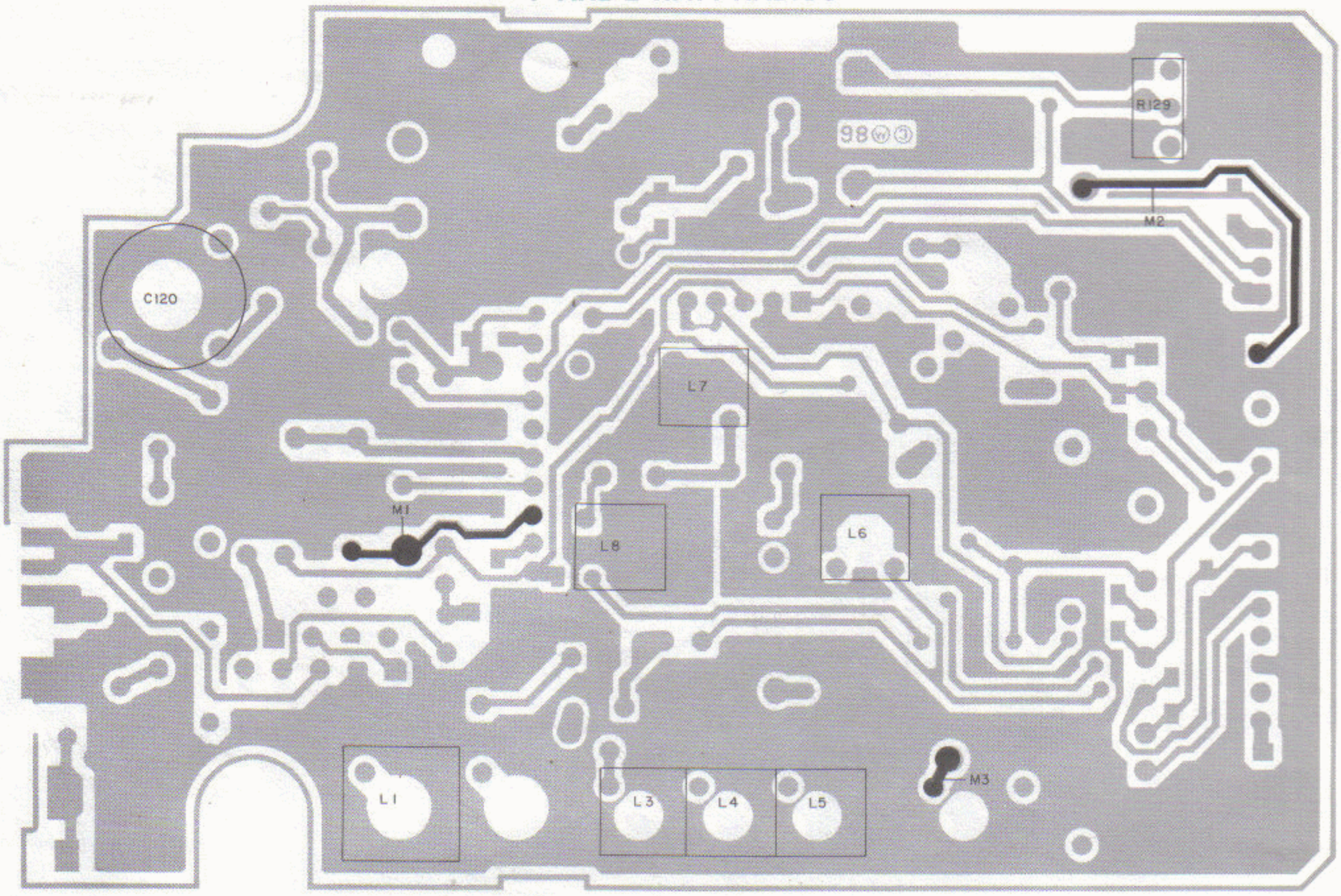

L2-CEPF-16663-A
OL-CEPF-16682-C

5-WATT RADIOS

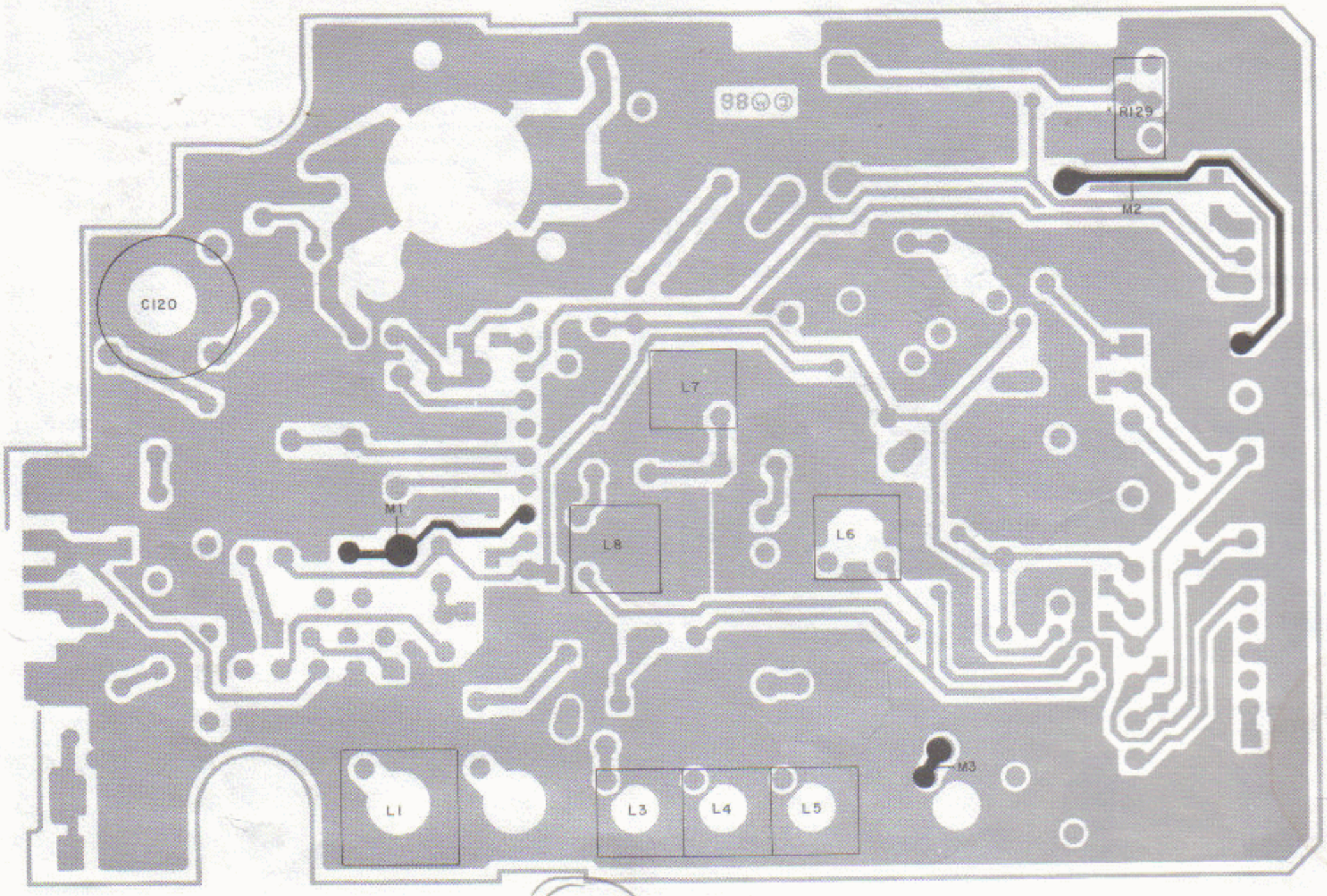

L2-CEPF-16940-A
OL-CEPF-16681-B

14

Downloaded from: http://groups.yahoo.com/group/ht600e

1-WATT AND 2-WATT RADIOS

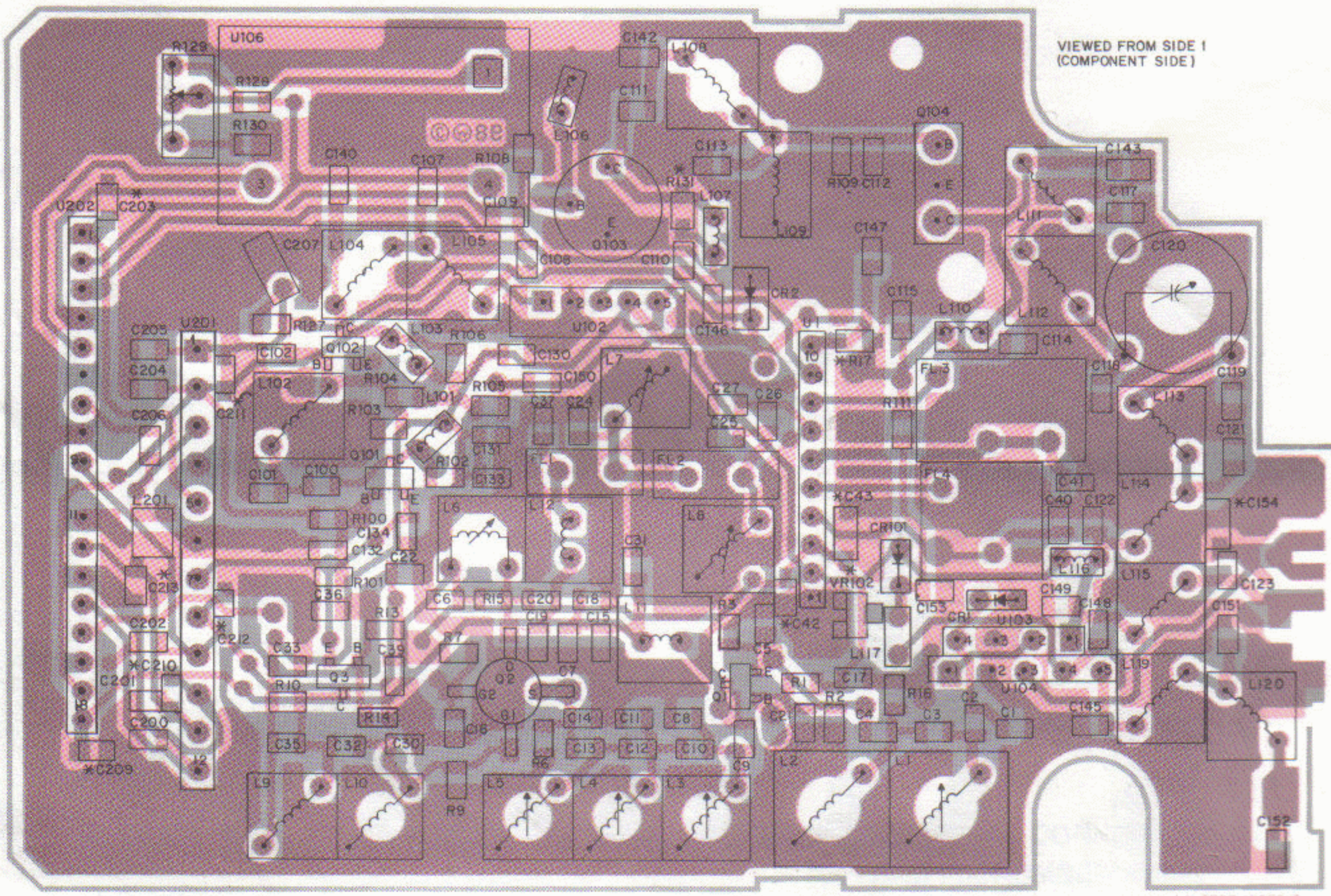

* MOUNTED ON SOLDER SIDE

L1-CEPF-16659-A
L2-CEPF-16660-A
OL-CEPF-18665-0

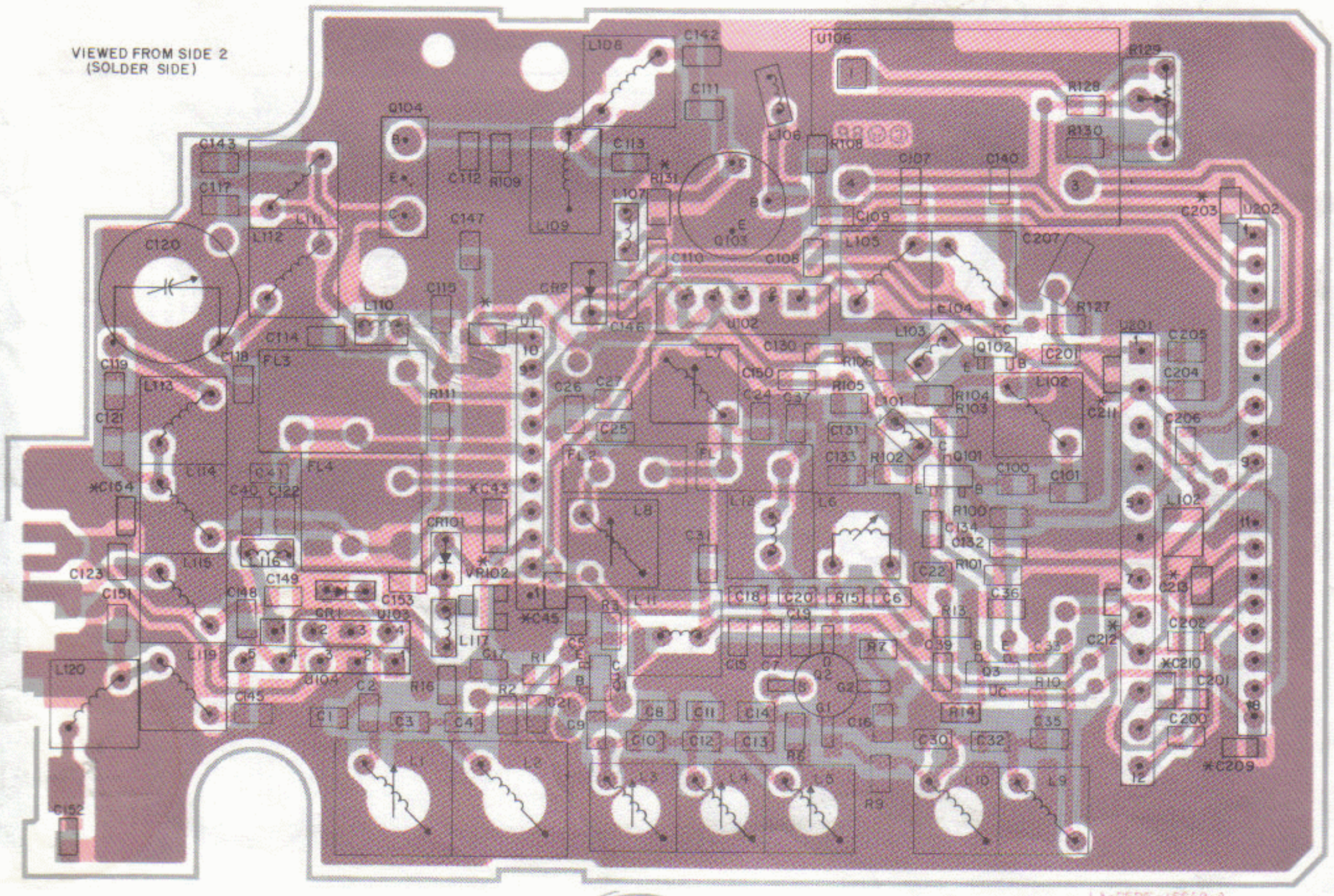

* MOUNTED ON SOLDER SIDE

L1-CEPF-16662-A
L2-CEPF-16663-A
OL-CEPF-18666-0

Downloaded from: http://groups.yahoo.com/group/ht600e

SCHEMATIC AND CIRCUIT BOARD NOTES

1. UNLESS OTHERWISE STATED, RESISTANCES ARE IN OHMS (k=1000), CAPACITANCES LESS THAN 1 ARE IN MICROFARADS, AND CAPACITANCES 1 OR GREATER ARE IN PICOFARADS.
2. DC VOLTAGES ARE MEASURED FROM POINT INDICATED TO CHASSIS GROUND USING MOTOROLA DC MULTIMETER OR EQUIVALENT. TRANSMITTER MEASUREMENTS SHOULD BE MADE WITH A 1.2µH RF CHOKE IN SERIES WITH VOLTAGE PROBE TO PREVENT CIRCUIT LOADING.
3. REFERENCE DESIGNATIONS ARE ASSIGNED IN THE FOLLOWING MANNER:

UNITS SERIES	= RECEIVER
100 SERIES	= TRANSMITTER
200 SERIES	= VCO & SYNTHESIZER
300 SERIES	= MISCELLANEOUS
400 SERIES	= CONTROLLER FLEX
700 SERIES	= DTMF
800 SERIES	= SIGNALLING

4. INTERCONNECT TIE POINT LEGEND:

(A)	B+ TO MOTHER BOARD
(B)	CONTROLLER FLEX B+
(5V REG)	REGULATED 5V
[D]	TO DTMF CIRCUIT
(M1)	METERING POINTS M1, M2, M3
(R)	RECEIVE 10V
(R5)	RECEIVE 5V
[S]	TO SYNTHESIZER BOARD
(T)	TRANSMIT 10V
(T5)	TRANSMIT 5V
[T]	TO CONTROLLER FLEX
[U]	TO UNIVERSAL CONNECTOR
[*]	TO FRONT COVER
(V1)	REGULATED 8V

VOLTAGE OVERLAY AND WAVEFORM NOTES

1. AC VOLTAGE READINGS IN dBm ARE MADE VIA A 1pF CAPACITOR INTO THE 50 OHM ADAPTER OF AN RF mV METER. RX READINGS ARE MADE WITH -20dBm CARRIER SIGNAL INTO REMOTE PORT. TX READINGS MADE WITH REMOTE PORT INTO 50 OHMS.
2. AC VOLTAGE READINGS IN mV ARE MADE VIA A HIGH IMPEDANCE RF mV METER.
3. THESE READINGS OBTAINED BY S/C BASE OF Q102 TO GROUND.
4. THIS READING IS OBTAINED BY PUTTING A 47 OHM RESISTOR ACROSS C31 TO REDUCE LOW INJECTION FEED THROUGH.

2-LAYER CIRCUIT BOARD COPPER DETAIL VIEWING COPPER STEPS AT EDGE OF BOARD IN PROPER LAYER SEQUENCE.

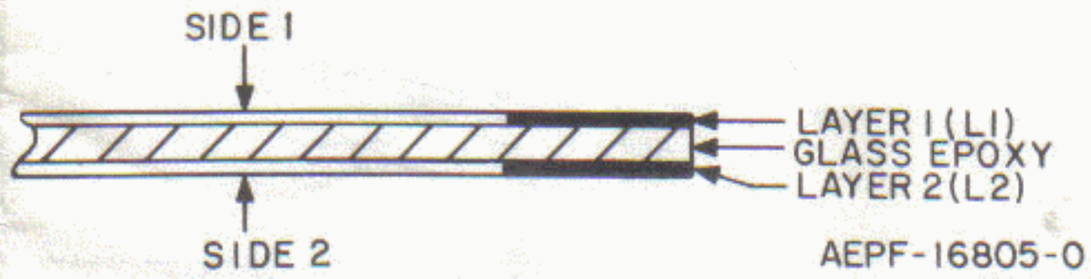

AEPF-16805-0

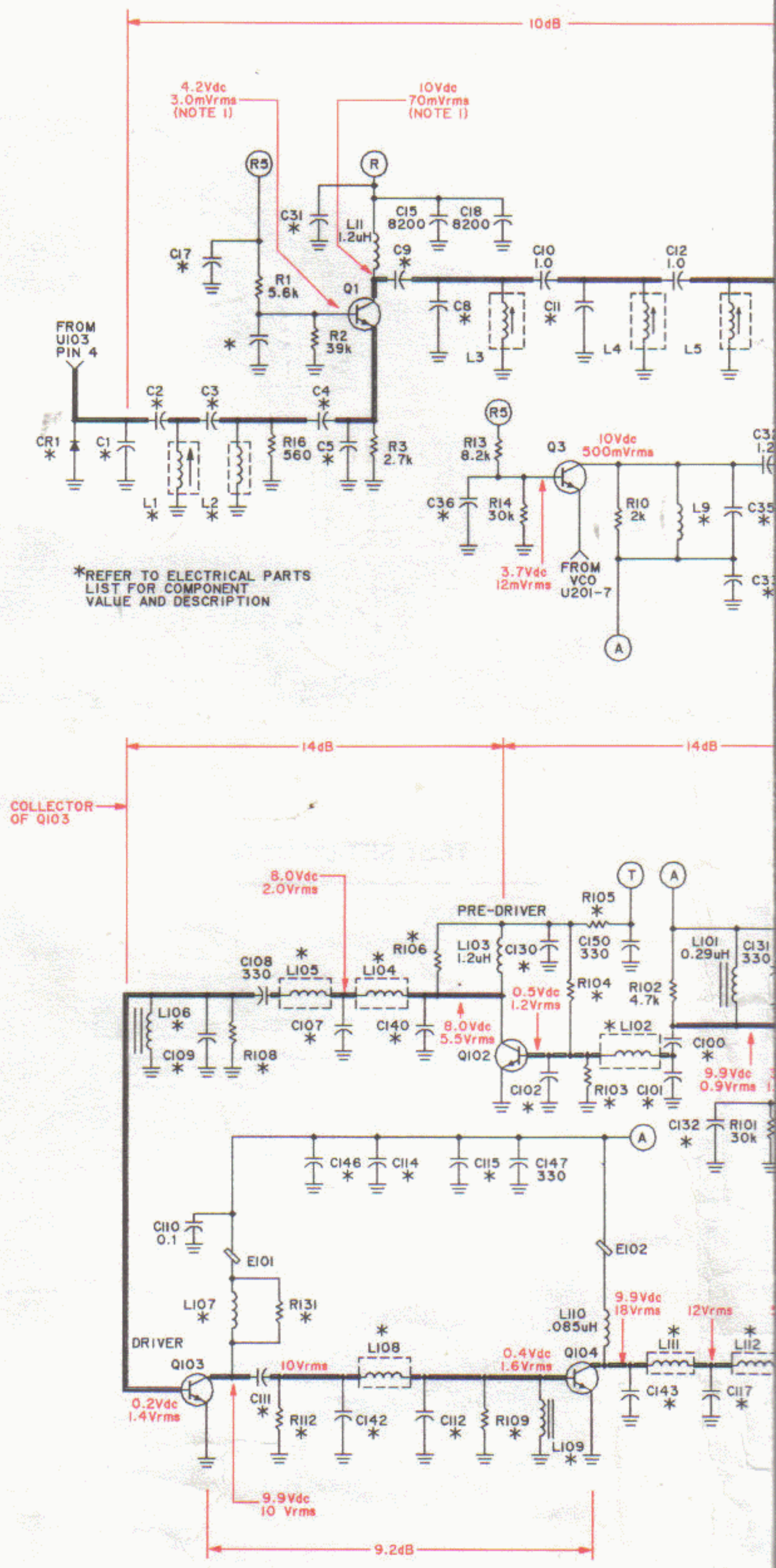

16

Downloaded from: http://groups.yahoo.com/group/ht600e

ITEMS REVISIONS CHART

ITEM NO.	FREQ. (MHz)	POWER OUTPUT	SUFFIX	CHANNEL SPACING
NUD6972A	146-162	5W		20/25kHz
NUD6973A	157-174	5W		20/25kHz
NUD6962A	146-162	1W/2W		20/25kHz
NUD6963A	157-174	1W/2W		20/25kHz
NUD6902A	146-162	5W		12.5kHz
NUD6903A	157-174	5W		12.5kHz
NUD6892A	146-162	1W/2W		12.5kHz
NUD6893A	157-174	1W/2W		12.5kHz

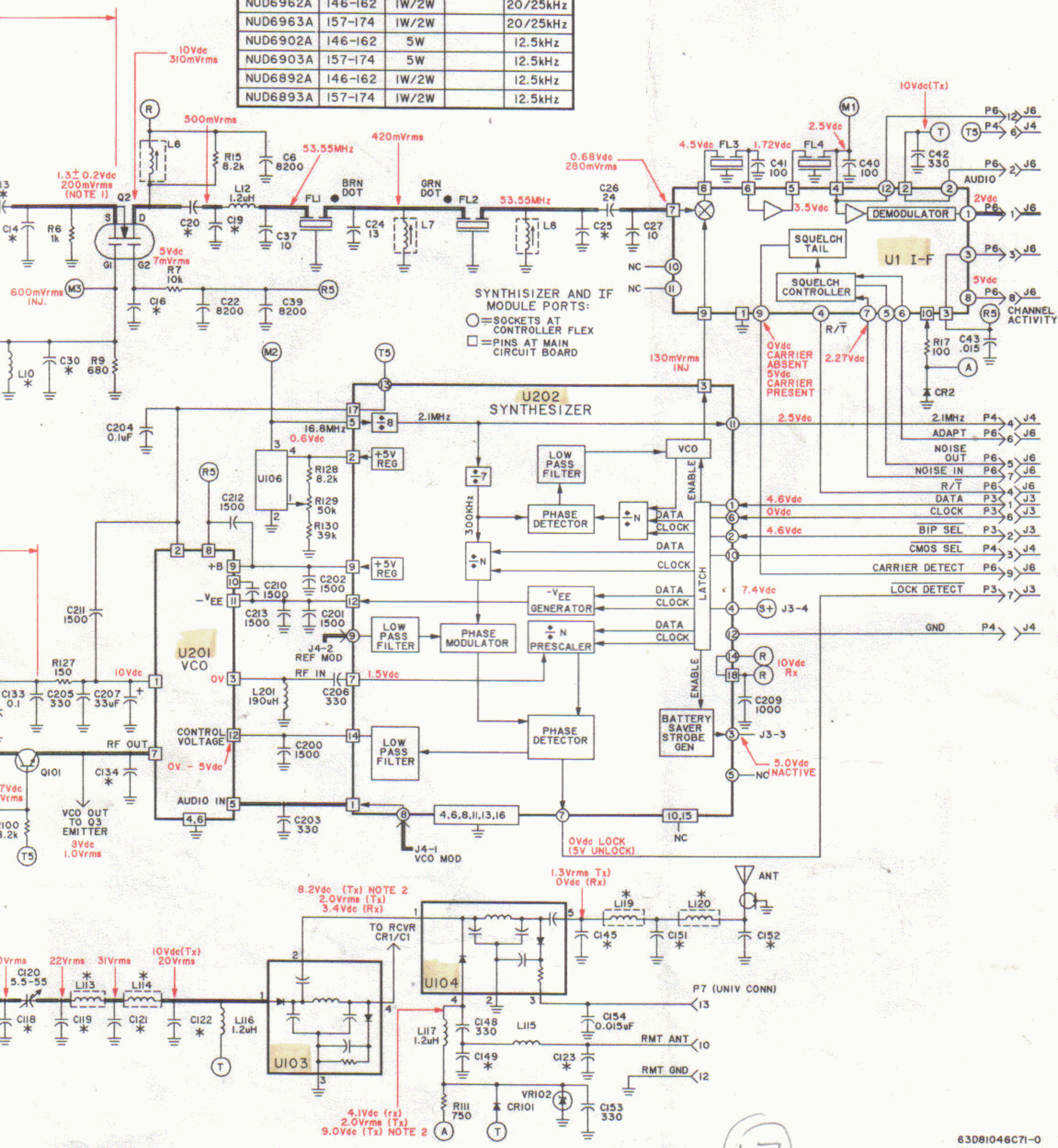

63D81046C71-O
DEPF-18824-O

17

TRANSCEIVER SCHEMATIC DIAGRAM (1-W, 2-W, & 5-W RADIOS) AND MAIN CIRCUIT BOARD COMPONENT LOCATION DIAGRAMS (1-W AND 2-W RADIOS)

Downloaded from: http://groups.yahoo.com/group/ht600e

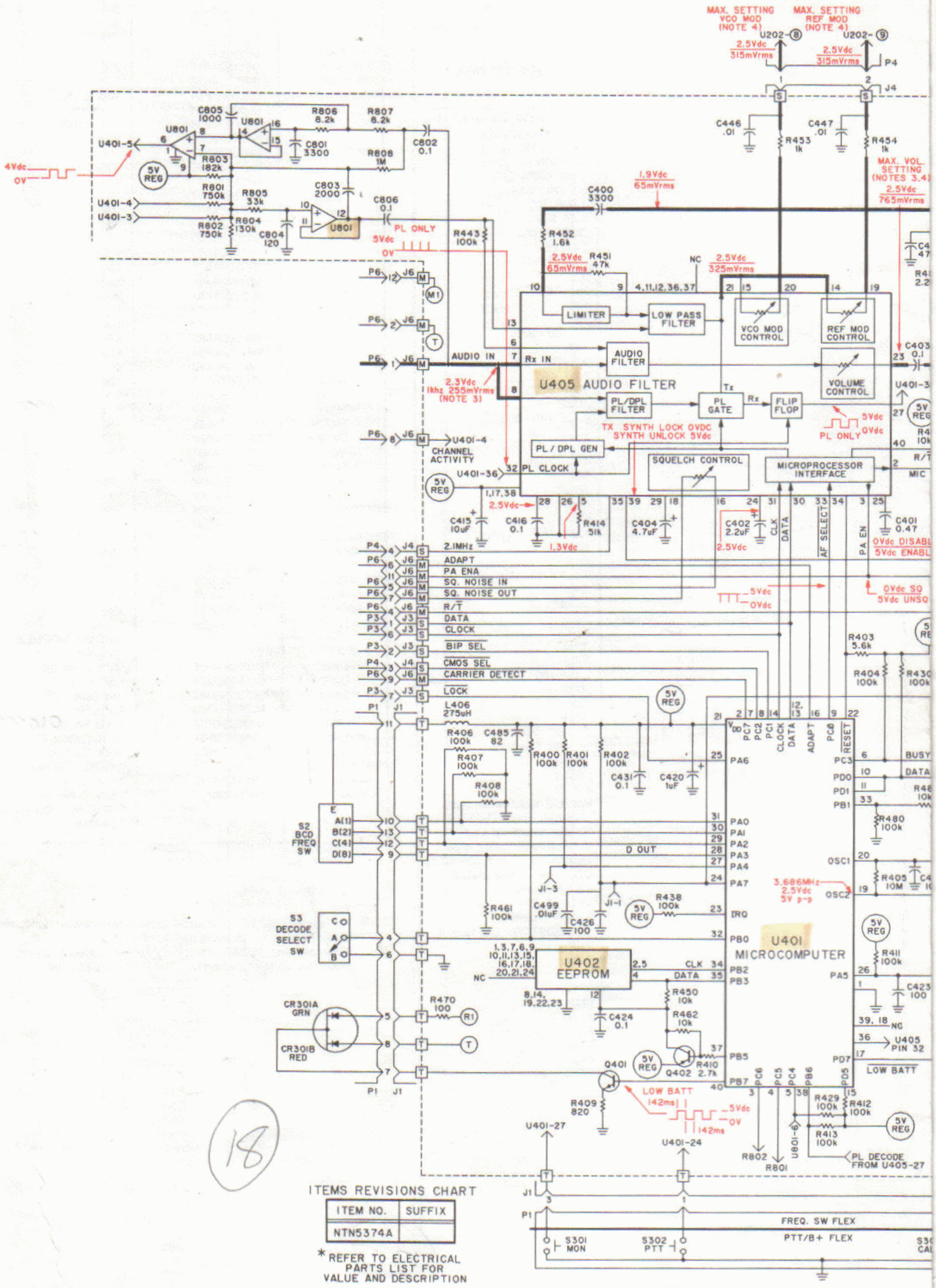

ITEMS REVISIONS CHART

ITEM NO.	SUFFIX
NTN5374A	

* REFER TO ELECTRICAL PARTS LIST FOR VALUE AND DESCRIPTION

Downloaded from: http://groups.yahoo.com/group/ht600e

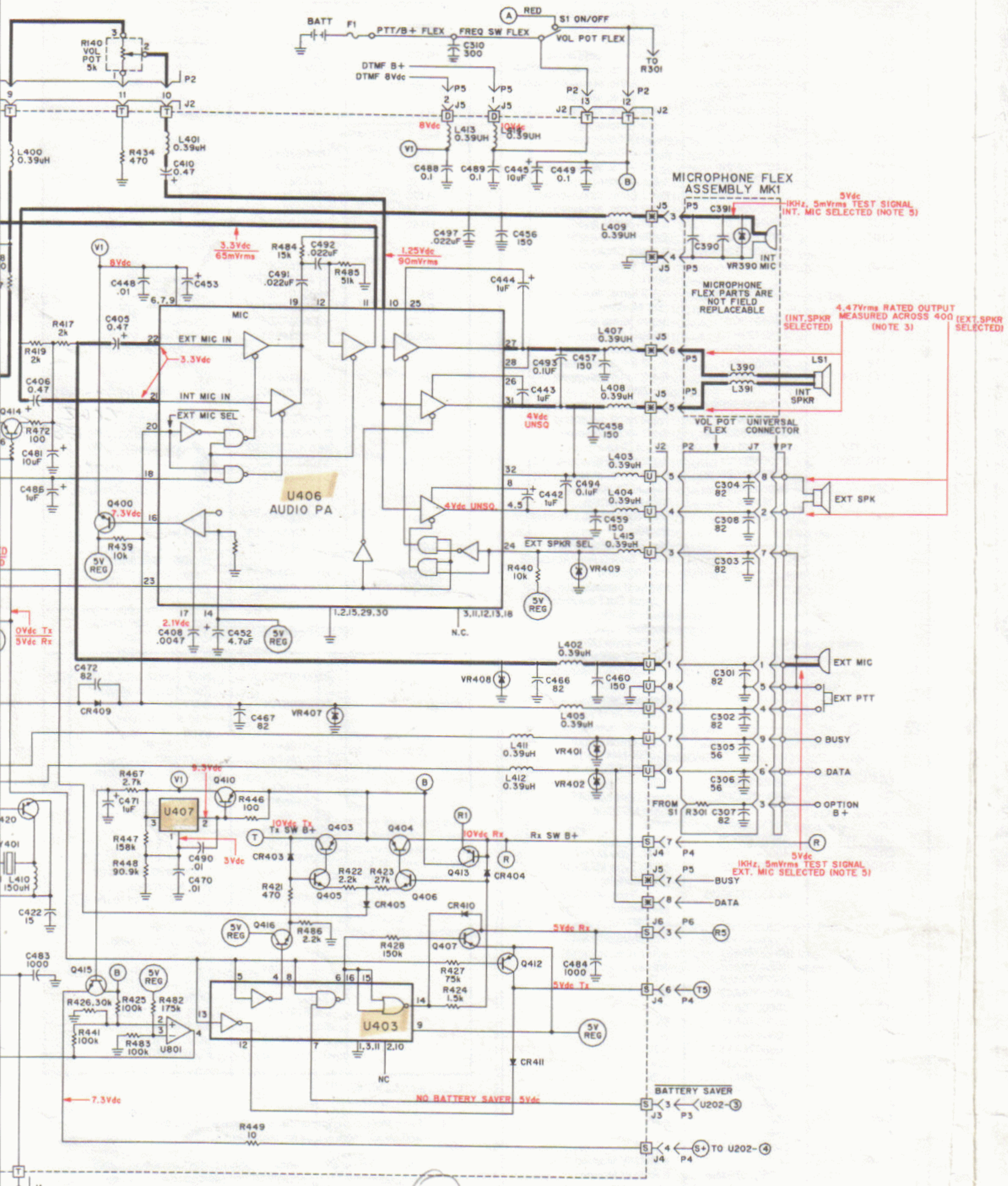

19

63D81046C72-0
OL-DEPF-18015-0

Downloaded from: http://groups.yahoo.com/group/ht600e

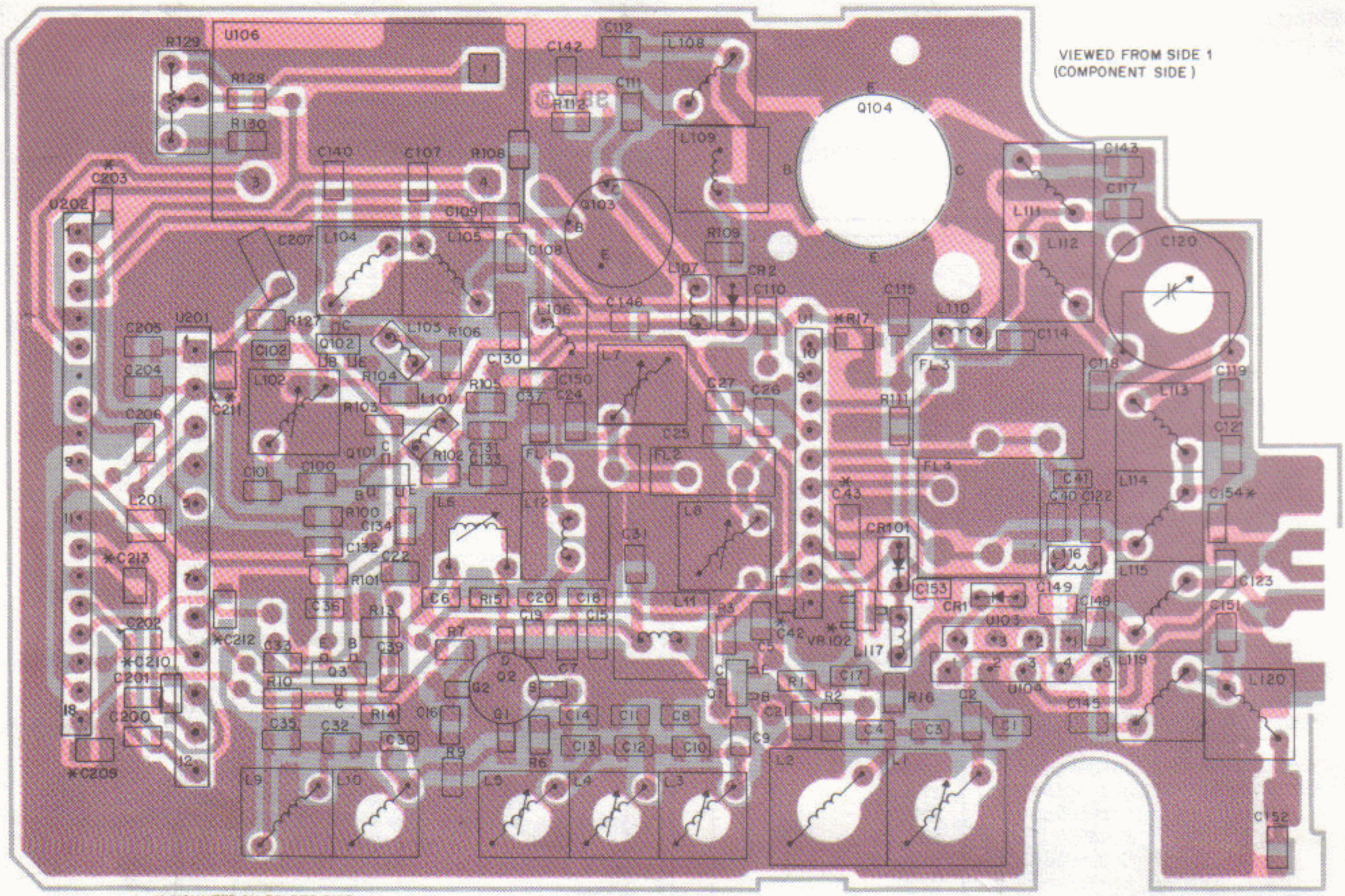

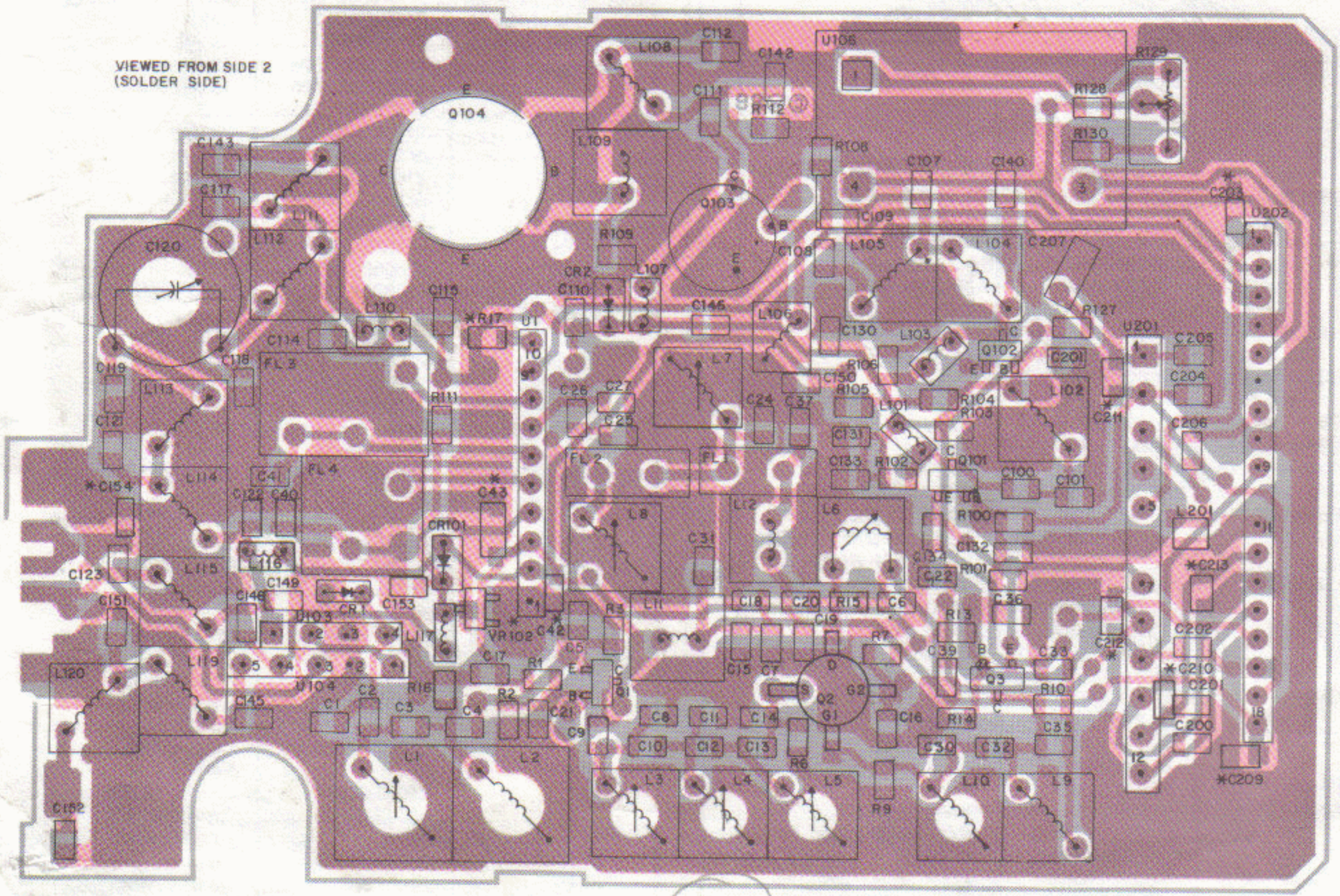

20

CONTROLLER FLEX SCHEMATIC DIAGRAM AND MAIN CIRCUIT BOARD COMPONENT LOCATION DIAGRAMS (5-W RADIOS)

Downloaded from: http://groups.yahoo.com/group/ht600e

Electrical Parts List
M = 146-162MHz
H = 157-174MHz

TPLF-3554-O

REFERENCE SYMBOL	MOTOROLA PART NO.	DESCRIPTION
		CAPACITOR, Fixed: pF±5% 50V unless stated
C1	2160520B14	36 ±0.25pF (M)
	or 2160520B11	27 (H)
C2	2160520B09	22 (M)
	or 2160520A23	8.2 ± 0.25pF (H)
C3	2160520A17	4.7 ±0.25pF (M)
	or 2160520A11	2.7 ±0.25pF (H)
C4	2160520B07	18 (M)
	or 2160520B06	16 (H)
C5	2160520B05	15 (M)
	or 2160520B06	16 (H)
C6	2160520A24	8200
C8	2160520A20	6.2 ±0.25pF (M)
	or 2160520A20	6.2 ±0.25pF (H)
C9	2160520C21	680 (M)
	or 2160521C11	680 ±10% (H)
C10	2160520A01	1.0 ±0.25pF
C11	2160520A20	6.2 ±0.25pF (M)
	or 2160520A21	6.8 ±0.25pF (H)
C12	2160520A01	1.0 ±0.25pF
C13	2160520B03	12 (M)
	or 2160520B04	13 (H)
C14	2160520B01	10 (M)
	or 2160520S02	11 (H)
C15	2160520A24	8200
C16, 17	2160520C21	680 (M)
	or 2160521C11	680 ±10% (H)
C18	2160520A24	8200
C19	2160523F22	39 (M)
	or 2160523F44	43 (H)
C20	2160520A17	4.7 ±0.25pF (M)
	or 2160520A23	8.2 ±0.25pF (H)
C21	2160520C21	680 (M)
	or 2160521C11	680 ±10% (H)
C22	2160521A24	8200
C24	2160523F45	13
C25	2160523F40	2.7 ±0.25pF (M)
	or 2160523F06	3 (H)
C26	2160520B10	24
C27	2160523F15	10
C30	2160520A19	5.6 ±0.25pF (M)
	or 2160520A23	8.2 ±0.25pF (H)
C31	2160520C21	680 (M)
	or 2160521C11	680 ±10% (H)
C32	2160520A03	1.2 ±0.25pF
C33	2160520C21	680 (M)
	or 2160521C11	680 ±10% (H)
C35	2160520A20	6.2 ±0.25pF (M)
	or 2160520A23	8.2 ±0.25pF (H)
C36	2160520C21	680 (M)
	or 2160521C11	680 ±10% (H)
C37	2160523F15	10
C39	2160521A24	8200
C40, 41	2160520C01	100
C42	2160520C13	330
C43	2111103A23	0.015µF±10%
C100	2160520A08	2 ±0.25pF (2W), (M, 5W)
	or 2160520A05	1.5 ±0.25pF (H, 5W)
C101	2160520B08	20 (M)
	or 2160520B07	18 ±0.25pF (H)
C102	2160520B10	24 (M, 5W)
	or 2160520B09	22 (H)
	or 2160520B12	30 (M, 2W)
C107	2160520B19	56 (H, 5W)
	or 2160520B18	51 (M, 2W)
	or 2160520B21	68 (M, 5W)
	or 2160520B19	56 (H, 2W)
C108	2160520C13	330
C109	2160520B14	36 (M, 2W)
	or 2160520B12	30 (M, 5W)
	or 2160520B13	33 (H)
C110	2160521G37	0.1µF + 10 - 20%
C111	2160520B17	47 (M, 2W)
	or 2160520B16	39 (M, 5W), (H, 2W)
	or 2160520B15	39 (H, 5W)
C112	2160520B24	91 (5W Models only)
C114	2160520C13	330 (M), (H, 2W)
	or 2160521G37	0.1µF + 10 - 20% (H, 5W)
C115	2160521G37	0.1µF + 10 - 20% (M), (H, 2W)
	or 2160520C13	330 (H, 5W)
C117	2160520B19	56 (M, 2W)
	or 2160520B23	82 (M, 5W)
	or 2160520B17	47 (H, 2W)
	or 2160520B22	75 (H, 5W)
C118	2160520B08	20 (M, 2W)
	or 2160520B03	12 (M, 5W)
	2160520B04	13 (H, 5W)
	2160520B05	15 (H, 2W)
C119	2160520B09	22 (M, 2W)
	or 2160520B03	12 (M, 5W)
	or 2160520B08	20 (H, 2W)
2005568P01	or 2160520A23	8.2 (H, 5W)
C120	2005588P01	Trimmer, 5.5-55pF
C121	2160520B15	39 (M)
	or 2160520B14	36 (H)
C122	2160520B07	18 (M, 2W)
	or 2160520B05	15 (M, 5W), (H, 5W)
	or 2160520B04	13 (H, 2W)
C123	2160520B09	22 (M, 2W)
	or 2160520B08	20 (M, 5W)
	or 2160520B07	18 (H)
C130	2160520C13	330 (M, 2W), (H)
	or 2160520A19	3300 (M, 5W)
C131	2160520C13	330
C132	2160520C13	330 (M, 2W), (H)
	or 2160520C21	680 (M, 5W)
C133	2160521G37	0.1µF + 80 - 20%
C134	2160520A16	4.3 ± 0.25pF (H, 5W Models only)
C140	2160520A12	3 (M, 2W)
	or 2160520A13	3.3 ±0.25pF (5W), (H, 2W)
C142	2160520B10	24 (M, 2W)
	or 2160520B16	43 (M, 5W)
	or 2160520B07	18 (H, 2W)
	or 2160520B11	27 (H, 5W)
C143	2160520B03	12 (M, 2W)
	or 2160520B07	18 (M, 5W)
	or 2160520B06	16 (H, 5W)
	or 2160520B01	10 (H, 2W)
C145	2160520B06	16 (M)
	or 2160520B04	13 (H)
C146	2160520C13	330 (2W Models) (H, 5W)
	or 2160521G37	0.1µF + 80 - 20% (M, 5W)
C147, 148	2160520C13	330
C149	2160520B07	18 (M)
	or 2160520B04	13 (H, 2W)
	or 2160520B05	15 (H, 5W)
C150	2160520C13	330
C151	2160520B15	39 (M)
	or 2160520B17	47 (H)
C152	2160520B07	18 (M)
	or 2160520B05	15 (H)
C153	2160520C13	330
C154	2111032A23	0.015µF ± 10%
C200 thru 202	2160521A15	1500
C204	2160521G37	0.1µF + 80 - 20%
C203, 205, 206	2160520C13	330
C207	2305458G12	33µF; 16V
C209	2160521A13	1000
C210 thru 213	2160521A15	1500
C301 thru 303	2160520B23	82
C304, 305	2160520B19	56
C306, 307	2160520B23	82
C309, 311	2160520B23	82
C310	2160520C13	330
		DIODE: See Note 1
CR1	4883654H06	Silicon
CR2	4805490G02	Silicon
CR101	4805454H01	Silicon
CR102	4805129M61	18V, ZENER
CR301A, 301B	4805729G24	LED, Bicolor
		CORE:
E101	7683960B04	Ferrite Bead
E102	7683960B01	Ferrite Bead
		FUSE:
F1	6505214E02	Axial, 5-Amp.
		FILTER:
FL1, 2	4805245J20	Crystal, 53.55MHz
	4805245J19	Crystal, 53.55MHz (12.5 kHz channel spacing only)
FL3	9105725Q03	Ceramic, 450kHz
FL4	9105726Q02	Ceramic, 450kHz
	9105726Q04	Ceramic, 450kHz (12.5 kHz channel spacing only)
		COIL, RF: unless stated
L1	2405669G12	4-1/2 turns, spacewound
L2	2405669G30	4-1/2 turns, spacewound

Downloaded from: http://groups.yahoo.com/group/ht600e

L3, 4, 5	2405523P18	8-1/2 turns, closewound; with core
L6	2405063H13	Tunable, 1.2µH Choke
L7, 8	2405063H05	Tunable, 0.4µH Choke
L9	2405523P10	5-1/2 turns, spacewound (M)
	or 2405523P09	4-1/2 turns, spacewound (H)
L10	2405523P09	4-1/2 turns, spacewound (M)
	or 2405523P08	3-1/2 turns, spacewound (H)
L11	2482723H38	1.2µH Choke
L12	2505129Q02	1.2µH Choke, precision
L101	2482723H28	0.29µH Choke
L102	2405523P28	6-1/2 turns, spacewound
L103	2482723H38	1.2µH Choke
L104	2405523P32	9-1/2 turns, closewound
L105	2405523P07	2-1/2 turns, spacewound
L106	2405913C01	3-turn ferrite bead
L107	2482723H28	0.29µH Choke (2W Models)
	or 2482723H13	0.85µH Choke (5W Models)
L108	2405523P07	2-1/2 turns, spacewound (2W)
	or 2405559P09	1-1/2 turns, airwound (5W Models)
L109	2405913C01	3-turn ferrite bead
L110	2482723H13	.085µH Choke
L111	2405559P07	2-1/2 turns, airwound
L112	2405559P11	4-1/2 turns, airwound (M)
L113, 114	2405559P01	6-1/2 turns, airwound (M) (H, 2W)
	or 2405559P02	5-1/2 turns, airwound (H, 5W)
L115	2405559P01	6-1/2 turns, airwound (M)
	or 2405559P02	5-1/2 turns, airwound (H)
L116, 117	2482723H38	1.2µH Choke
L119, 120	2405559P01	6-1/2 turns, airwound (M)
	or 2405559P02	5-1/2 turns, airwound (H)
L201	2405452C70	190µH Choke
LS1	5005155Q03	**TRANSDUCER**
MK1	0105956P37	**MICROPHONE ASSEMBLY:**
		PLUG:
P1	----------	Not field replaceable, order Freq. Switch Flex Assembly 0105956M68
P2	----------	Not field replaceable, order Volume Pot Flex Assembly 0105956M66
P3, 4	----------	Not field replaceable, order Synthesizer U202
P5	----------	Not field replaceable, order Microphone Assembly 0105956M62
P6	----------	Not field replaceable, order I-F module U1
P7	----------	Not field replaceable, order Top Control Panel Assembly 0105951N41
		TRANSISTOR: See Note II
Q1	4805218N08	NPN
Q2	4805452G08	Dual Gate MOSFET; Type M52G08
Q3	4805218N09	NPN
Q101, 102	4805218N09	NPN
Q103	4805474G37	NPN; Type M74G37
Q104	4805452G06	NPN; Type M52G06 (2W Models)
	or 4805474G33	NPN; Type M74G33 (5W Models)
		RESISTOR, Fixed: W ± 5%; 1/10W unless stated
R1	0660076A67	5.6k
R2	0660076A87	38k
R3	0660076A59	2.7k
R6	0660076A49	1k
R7	0660076A73	10k
R9	0660076A45	680
R10	0660076A56	2k
R13	0660076A71	8.2k
R14	0660076A84	30k
R15	0660076A71	8.2k
R16	0660076A43	560
R17	0660076A25	100
R100	0660076A71	8.2k
R101	0660076A84	30k
R102	0660076A65	4.7k
R103	0660076A68	6.2k (2W Models)
	or 0660076A69	6.8k (5W Models)
R104	0660076A84	30k (M, 2W)
	or 0660076A82	24k (5W Models)
	or 0660076A79	18k (H, 2W)
R105	0660076A25	100 (M, 2W)
	or 0660076A26	110 (5W Models)
	or 0660076A32	200 (H, 2W)
R106	0660076A67	5.6k (M, 2W), (H)
	or 0660076A73	10k (M, 5W)
R108	0660076A17	47 (2W)
	or 0660076A23	82 (5W)
R109	0660076A17	47 (M, 2W), (H)
	or 0660076A09	22 (M, 5W)
R111	0660076A46	750
R112	0660076A29	150 (5W Models)
	or -----	Not used on 2W Models
R127	0660076A29	150
R128	0660076A71	8.2k
R129	1805581P01	Pot., 50k
R130	0660076A87	39k
R131	0660076A25	100 (H, 2W Models only)
R140	1805100Q03	Pot., 5k
		SWITCH:
S1	----------	On/Off, Part of R140
S2	4005265Q01	2- & 8-channel radios
	or 4005265Q02	16-channel radios
S3	4005101Q01	Toggle, SPDT
S301	3905834K01	Snap Dome, Monitor
S302	3905834K01	Snap Dome, PTT
S303	3905834K01	Snap Dome, Monitor
		CIRCUIT MODULE: See Note I
U1	5105849S01	I-F
	5105729E90	I-F (12.5kHz channel spacing only)
U103	5105822P51	Antenna Switch GC62
U104	5105822P64	Antenna Selector (2W) GB25
	or 5105729E93	Antenna Selector (5W)
U106	5105729E52	Ref. Oscillator
	5105729E72	Ref. Oscillator (12.5kHz channel spacing only)
U201	5105822P60	VCO (M)
	or 5105822P59	VCO (H)
U202	5105822P76	Synthesizer
		DIODE: See Note I
VR102	4805129M61	Zener, 18V
VR301	4805129M42	Zener, 5.6V

NONREFERENCED ITEMS

	0200007007	NUT, Hex; 8-32 X 1/4" X 3/32" (for Q104, 5W Models)
	0300136771	SCREW, Phillips; 2-56 X 3/16" (for Q104 heatsink)
	0705196A04	BOOT, for FL1, FL2
	0705766R01	SUPPORT, Rubber
	1400861196	INSULATOR, for Q103
	1405238Q01	INSULATOR, for U106
	1405496B01	INSULATOR (I-F)
	2605116S01	SHIELD, P.A. Output
	2605494B01	SHIELD, I-F Module
	2605524P01	CAN, for L11, L12
	2605524P03	CAN, for L111 thru L115, L119, L120, and L108 (5W Models)
	2605532P01	HEAT SINK, for Q104 (5W Models)
	2605578P01	HEAT SINK, for Q104 (2W Models)
	2605820D07	CAN, for L1, L2
	2683379H01	HEAT SINK, for Q103
	3905130N01	CONTACT STRIP
	3905509R02	CONTACT
	7505295B07	PAD, for FL1, FL2
	7505695R01	CUSHION, for U106
	8405589P02	PC BOARD (2W)
	8405591P02	PC BOARD (5W)

NOTES:

I. For optimum performance, order replacement diodes, transistors, and circuit modules by Motorola part number only.

II. When ordering crystal units, specify carrier frequency, crystal frequency, crystal type number, and Motorola part number.

* Not field replaceable, order microphone flex assembly 0105956P37.

Downloaded from: http://groups.yahoo.com/group/ht600e

REFERENCE SYMBOL	MOTOROLA PART NO.	DESCRIPTION
		CAPACITOR, Fixed: pF ±5% 50V unless stated
C400	2111032A15	3300 ± 10%
C401	2360562A07	0.47; 25V
C402	2360562A21	2.2µF ±20%; 20V
C403	2160521G37	0.1 +80 - 20%
C404	2360562A28	4.7µF; 10V
C405, 406	2360562A07	0.47; 25V
C408	2160521C21	.0047 ± 10%
C410	2360562A07	0.47; 25V
C415	2360562A43	10µF; 16V
C416	2160521G37	0.1
C420	2360562A13	1µF; 16V
C421	2111031B01	10
C423	2160520C01	100
C424	2160521G37	0.1 +80 - 20%
C426	2160520C01	100
C431	2160521G37	0.1 +80 - 20%
C442– 444	2360562A13	1µF; 16V
C445	2369562A35	10µF; 25V
C446–448	2160521C25	.01µF
C449	2111032B13	0.1µF +80 - 20%
C452	2360562A28	4.7µF; 10V
C453	2360562A43	10µF; 16V
C456–460	2160520C05	150
C466, 467	2160520C05	82
C470	2111032A21	.01µF
C471	2360562A13	1.0µF; 16V
C472	2111031A37	82
C481	2360562A43	10µF; 16V
C483, 484	2160521A13	1000
C485	2111031A37	82
C488, 489	2160521G37	0.1µF + 80 - 20%; 25
C490	2160521C25	.01µF
C491, 492, 497	2160521C29	.022µF
C493, 494	2160521G37	.1µF
C498	2160521C21	.0047µF
C499	2160521C25	.01µF
C801	2111031A15	3300
C802	2111032B13	0.1µF +80 - 20%
C803	2160520P08	2000
C804	2111031A51	330
C805	2111031A21	.01µF
C806	2111032B13	0.1 +80 - 20%
		DIODE: See Note
CR403–405	4805494Q04	Silicon
CR409–411	4805494Q04	Silicon
		JACK:
J1–J5	----	Not field replaceable, order Controller Flex NTN5374A
J6	0105959M27	Header Assembly, 13-pin
J7	----	Not field replaceable, order Volume Pot. Flex 0105956M66
		COIL, RF: unless stated
L400–409	2462575A01	0.39µH Choke
L410	2460590A02	150µH Choke
L411–415	2462575A01	0.39µH Choke
		TRANSISTOR: See Note II
Q400	4805128M94	PNP
Q401	4805128M12	NPN
Q402–404	4805128M94	PNP
Q405, 406	4805128M12	NPN
Q407	4805128M94	PNP
Q410	4805128M10	PNP
Q412	4805128M94	PNP
Q413	4805128M12	NPN
Q414	4805128M94	PNP
Q415, 416, 420	4805128M12	NPN
		RESISTOR, Fixed: Ω ± 5%; 1/8W unless stated
R400–402	0611024A97	100k
R403	0611024A67	5.6k
R404	0611024A97	100k
R405	0660076K49	10 Meg ± 10%
R406–408	0611024A97	100k
R409	0611024A47	820
R410	0611024A59	2.7k
R411–413	0611024A97	100k
R414	0611024A90	51k
R417	0611024A56	2k
R419	0660076A56	2k
R421	0611024A41	470
R422	0611024A57	2.2k
R423	0611024A83	27k
R424	0611024A53	1.5k
R425	0660076F01	100k ± 1%
R426	0660076E84	30k ± 1%
R427	0660076A94	75k; 1/10W
R428	0660076B05	150k
R429	0660076B01	100k
R430	0611024A97	100k
R434	0611024A41	470
R438	0611024A97	100k
R439	0611024A73	10k
R440	0660076A73	10k
R441	0660076B25	1 Meg
R443	0611024A97	100k
R446	0611024A25	100
R447	0611024J08	158k ± 1%
R448	0611024H84	90.9k ± 1%
R449	0611024A01	10
R450	0611024A73	10k
R451	0611024A89	47k
R452	0611024A54	1.6k
R453, 454	0611024A49	1k
R462	0660076A73	10k
R466	0660076A73	10k
R467	0611024A59	2.7k
R470	0611024A25	100
R472	0611024A25	100
R480, 461	0611024A97	100k
R481	0611024A73	10k
R482	0611024J09	175k±1%
R483	0611024H88	100k
R484	0611024H09	15k
R485	0660076E90	51k±1%
R486, 487	0611024A57	2.2k
R801, 802	0611024J73	750k
R803	0611024J14	182k
R804	0611024B01	130k
R805	0611024A85	33k
R806, 807	0611024A74	82k
R808	0611024B22	1 Meg
		CIRCUIT MODULE: See Note I
U401	0105951P05	Microcomputer
U402	0105956M99	EEPROM
U403	0105956M87	Hex Gate
U405	0105950P22	Audio Filter
U406	0105954P37	Audio PA 0105958P72
U407	5160870B01	5V Regulator, CMOS
U801	0105950N67	Quad Op-Amp
		DIODE: See Note I
VR401, 402	4805129M42	Zener, 5.6V
VR407–409	4805129M42	Zener, 5.6V
		CRYSTAL: See Note II
Y401	4805664G33	3.6864MHz

NOTES:

I. For optimum performance, order replacement diodes, transistors, and circuit modules by Motorola part number only.

II. When ordering crystal units, specify carrier frequency, crystal frequency, crystal type number, and Motorola part number.

23

Downloaded from: http://groups.yahoo.com/group/ht600e

MICROPHONE FLEX ASSEMBLY MK1

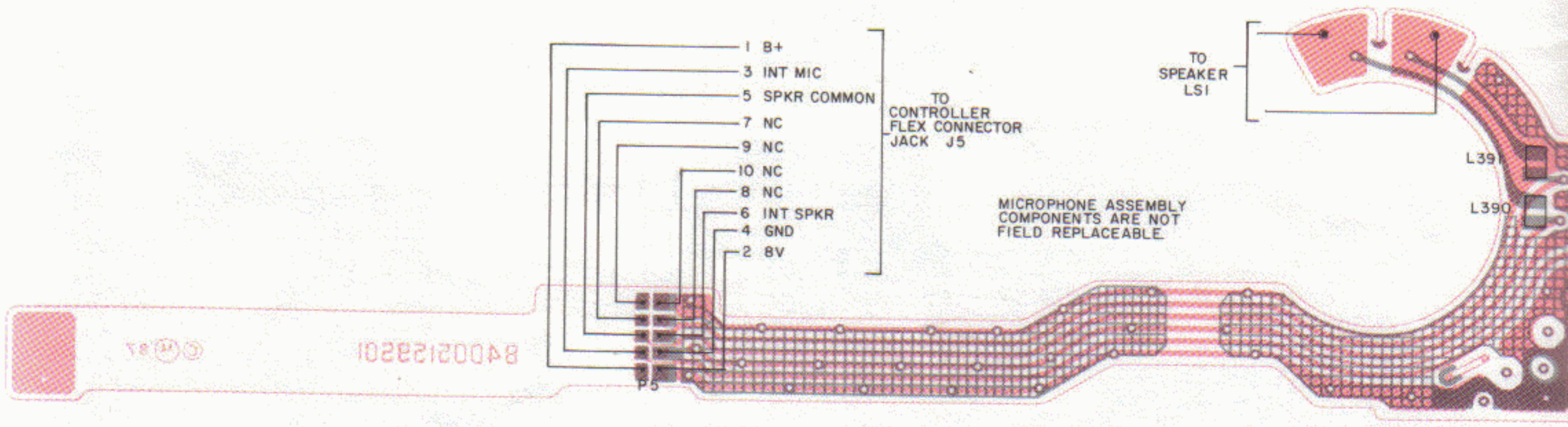

L1-BEPF-18173-0
L2-BEPF-18174-0
OL-BEPF-18175-0

FREQUENCY SWITCH FLEX

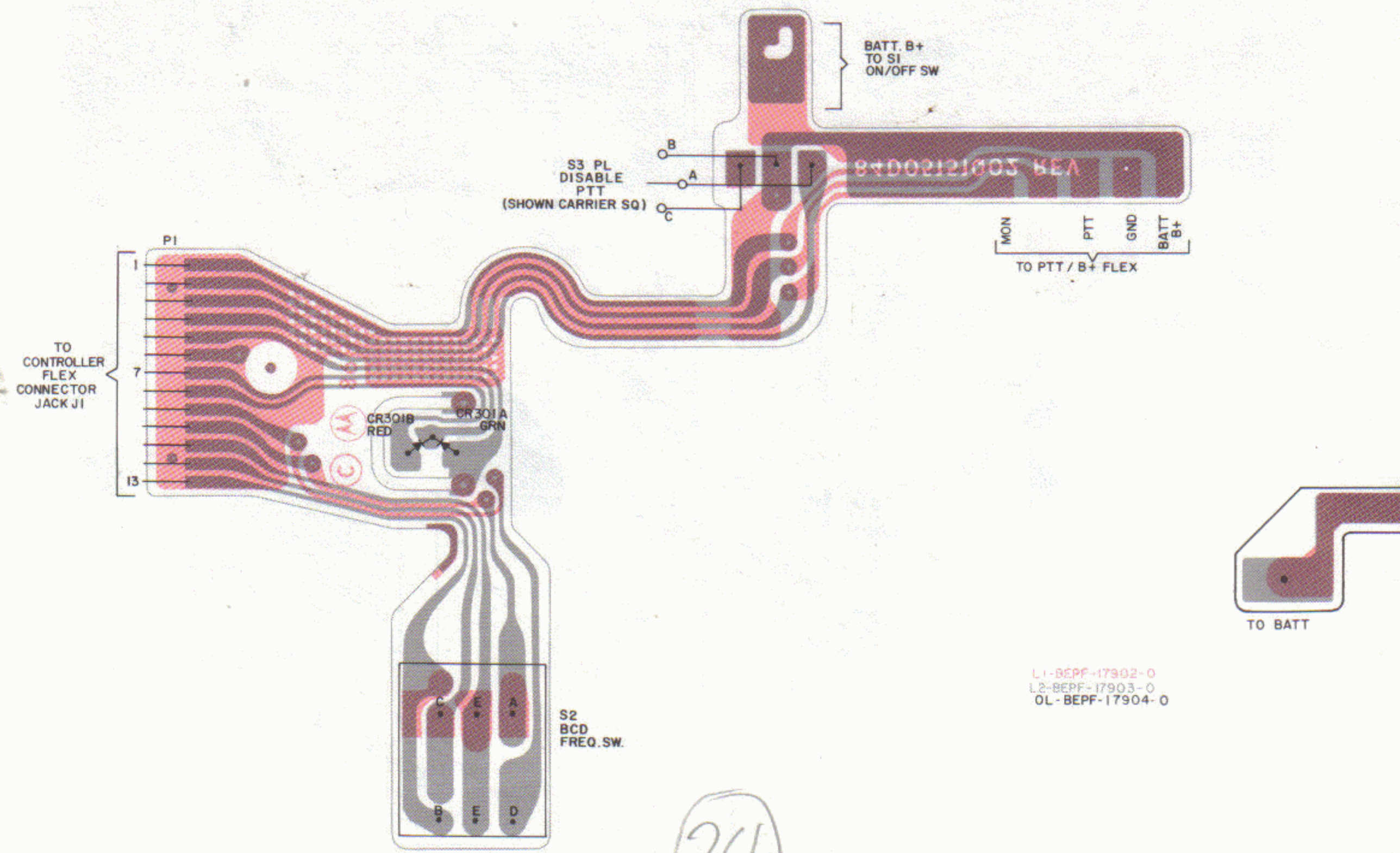

L1-BEPF-17902-0
L2-BEPF-17903-0
OL-BEPF-17904-0

24

Downloaded from: http://groups.yahoo.com/group/ht600e

VOLUME POT FLEX

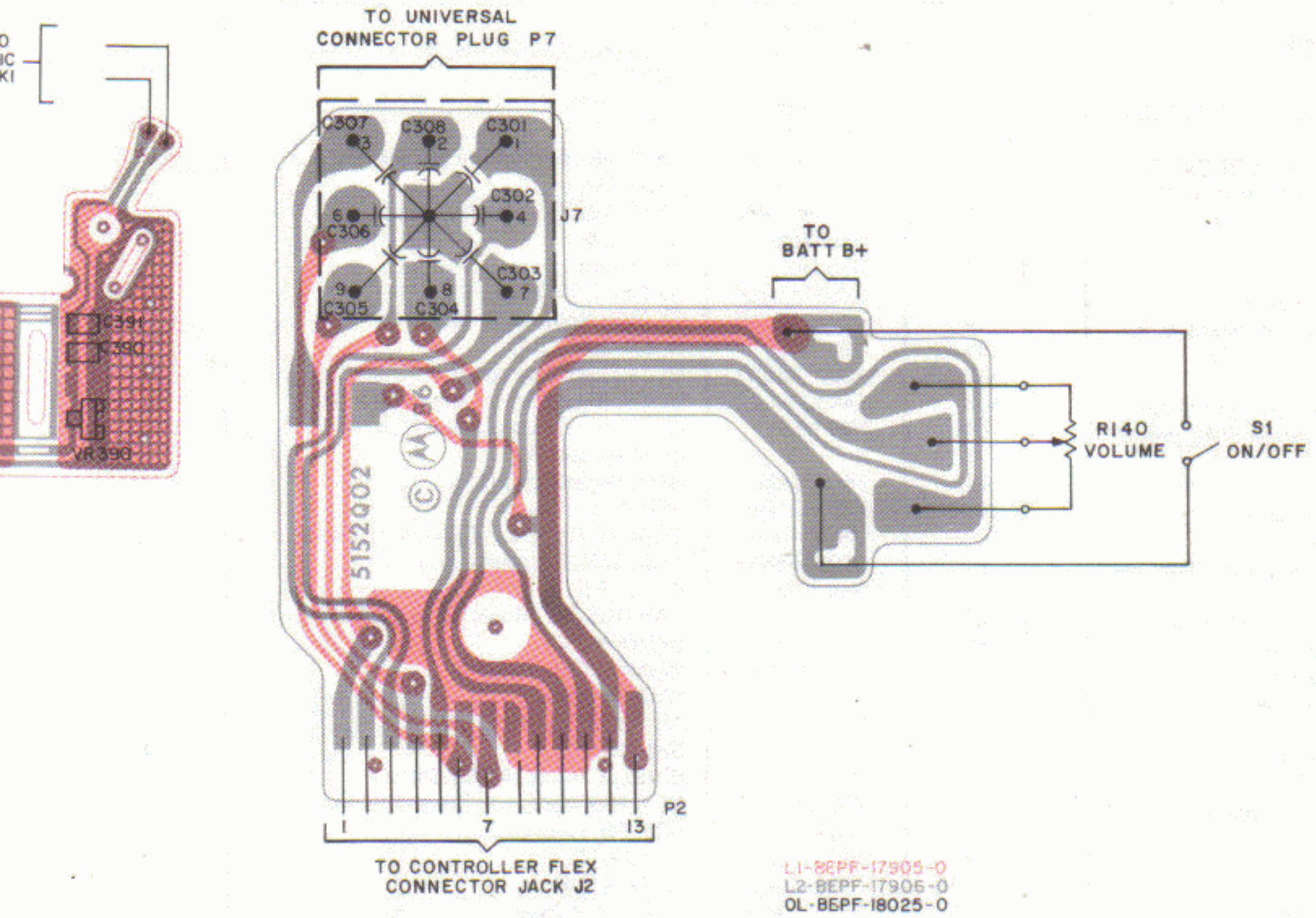

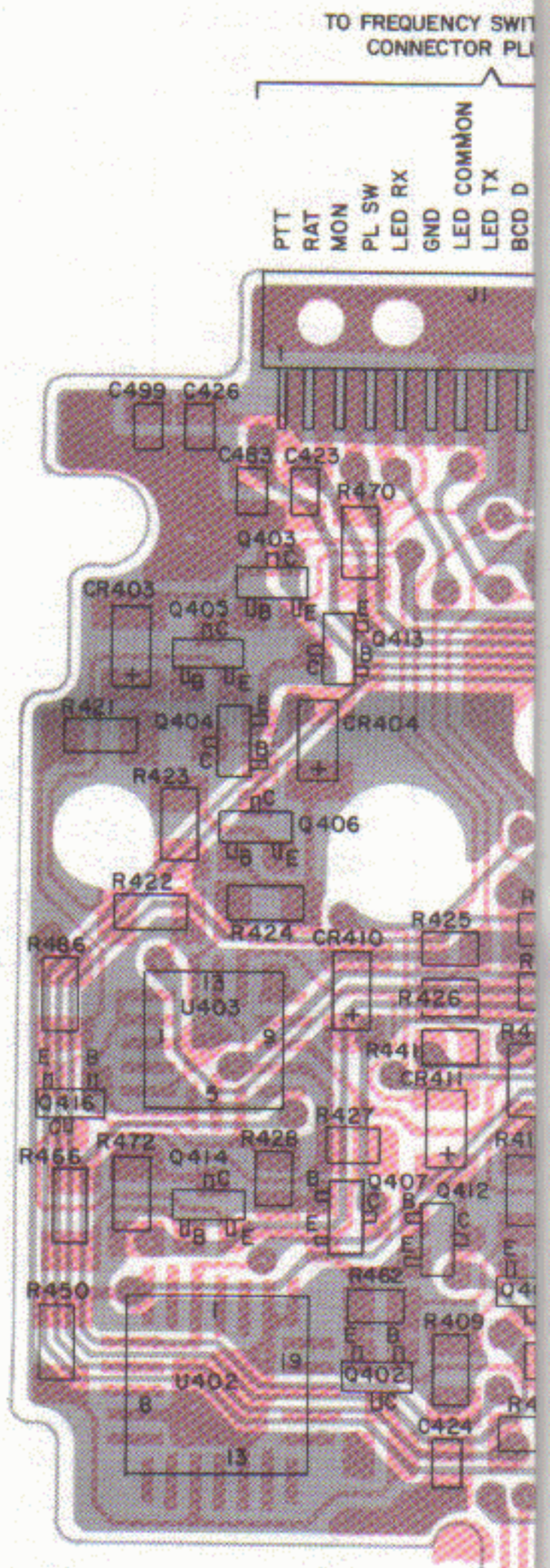

PTT/B+ FLEX

VIEWED FROM SIDE 2

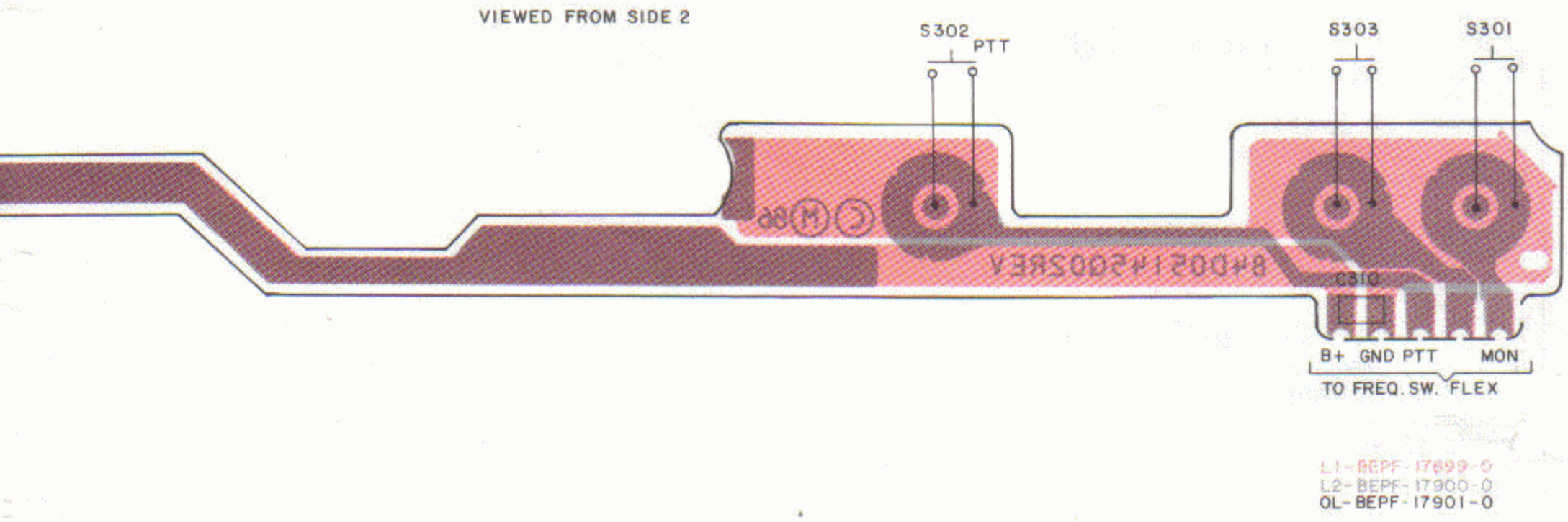

25

Downloaded from: http://groups.yahoo.com/group/ht600e

CONTROLLER FLEX

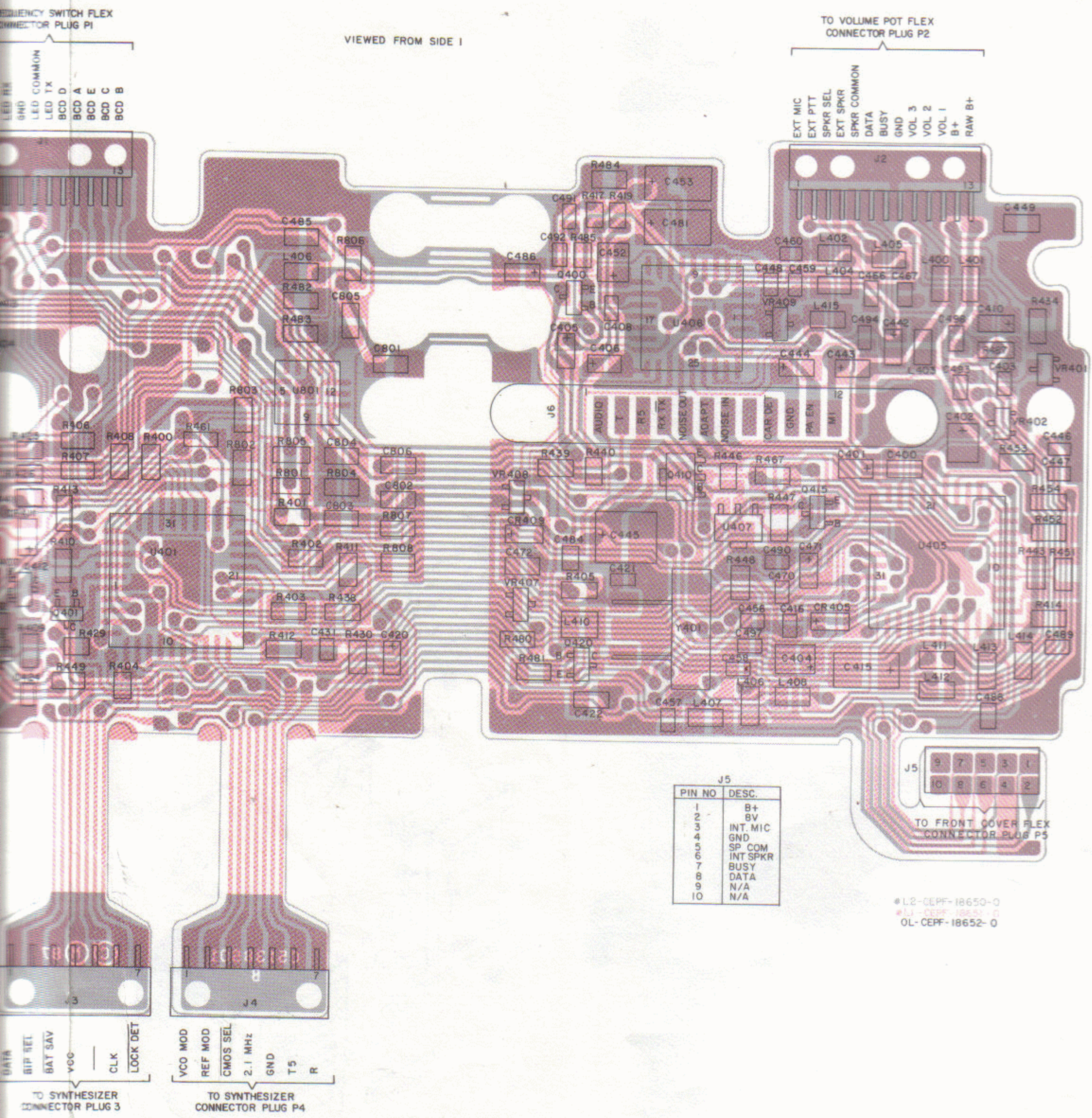

J5	
PIN NO	DESC.
1	B+
2	8V
3	INT. MIC
4	GND
5	SP COM
6	INT SPKR
7	BUSY
8	DATA
9	N/A
10	N/A

#L2-CEPF-18650-0
#L1-CEPF-18651-0
OL-CEPF-18652-0

26

Downloaded from: http://groups.yahoo.com/group/ht600e

ITEM NO.	MOTOROLA PART NO.	DESCRIPTION
1	0105956M63	ASSEMBLY, Frame
2	NHN6419A	KIT, Housing; includes items 36 thru 51
3	NTN4956A	KIT, Front Cover; includes items 4, 45, 79 thru 86
4	3305260Q06	NAMEPLATE, Front
5	- - - - - - - - -	Not Used
6	0300136785	SCREW, Phillips; 4-40 x 3/16"
7	NTN5374A	KIT, Controller Flex; includes items 8, 9, 10, 13, 14, 67, 68, 69, 75, 77, 78
8	0105952P34	SHIELD, Bottom
9	- - - - - - - - -	ASSEMBLY, Controller Flex; part of item 7
10	- - - - - - - - -	SHIELD, Center; Top Carrier Side; part of item 7
11	1505102S01	COVER, Dust
12	0105951N79	ASSEMBLY, Knob; VOLUME
13	1505182S01	CARRIER, Top; Controller Flex
14	- - - - - - - - -	SHIELD, Center; Bottom Carrier Side; part of item 7
15	0300136771	SCREW, Phillips; 2-56 x 3/16" (4 req'd.)
16	1305676R01	ESCUTCHEON, 2-channel
	or 1305676R03	ESCUTCHEON, 8-channel
	or 1305676R06	ESCUTCHEON, 16-channel
17	0205629L01	NUT, Hex (2 req'd)
18	0405534R01	WASHER, Flat; Octagonal
19	0205163Q01	NUT, Spanner
20	0405162Q02	WASHER,Flat; Volume Pot and Freq. Switch
21	0405216L04	WASHER, Flat
22	0205765L02	NUT, Spanner
23	See Note	LED, Bicolor (CR301A, 301B)
24	3205157Q01	SEAL, LED
25	0105951N41	ASSEMBLY, Control Top
26	Not Used	
27	See Note	SWITCH, Frequency (S2)
28	0405162Q01	WASHER, Flat
29	3205082E01	GASKET, O-Ring; (2 req'd.)
30	0484345A06	WASHER, Seal
31	See Note	SWITCH / POT, On-Off / Volume (S1 / R140)
32	3205141Q02	GASKET, O-Ring
33	3205141Q03	GASKET, O-Ring; Mode Select Switch
34	0405218Q01	WASHER, Flat; Octagonal (2- & 8-channel)
	or 0405534R01	WASHER, Flat; Octagonal (16-channel)
35	0300140369	SCREW, Flat Hd.; 2-56 x 1/8" (4 req'd)
36	4605945K05	CONTACT STUD, Battery
37	3905127Q01	CONTACT, B+
38	3205082E24	GASKET, O-Ring
39	0705830C02	SUPPORT, Contact (2 req'd)
40	3905421C07	CONTACT, Battery (2 req'd)
41	2905124Q01	LUG (2 req'd)
42	0400002625	LOCKWASHER, Split #2 (3 req'd)
43	4105944K01	SPRING, Battery Latch (2 req'd)
44	5505536P01	LATCH
45	0300139982	SCREW, Phillips Hd.; 2-56 x 5/32" (7 req'd)
46	3205082E03	GASKET, O-Ring (2 req'd)
47	See Note	FUSE (F1)
48	0400009761	LOCKWASHER, Split #4 (2 req'd)
49	0305941K01	SCREW, Captive; 4-40 (2 req'd)
50	6405531P02	PLATE, Base
51	4505535P01	LEVER, PTT
52	0305137Q01	SCREW, Phillips Hd.; 4-40 x 1/2" (2 req'd)
53	0484345A06	WASHER, Seal (2 req'd)
54	- - - - - - - - -	LABEL, FCC
55	- - - - - - - - -	LABEL, FM
56	3205231Q01	SEAL, Dome (PTT); part of item 59
57	3205196Q01	SEAL, Dome (Mon); part of item 59
58	3905834K04	CONTACT, Snap Dome; part of item 59
59	0105951N40	ASSEMBLY, B+ / PTT Flex; includes items 56, 57, 58
60	See Note	(P/O U201)
61	See Note	PLUG (P3)
62	See Note	PLUG (P4)
63	See Note	FLEX, Connector (P/O of U1)
64	0105953N75	ASSEMBLY, Main Back Shield
65	0300136772	SCREW, Phillips Hd.; 2-56 x 5/16" (5 req'd)
66A	2605532P01	HEATSINK (5W radios)
66B	2605578P01	HEATSINK (1W and 2W radios)
67	0300138620	SCREW, Phillips; 2-56 x 5/16" (2 req'd)
68	See Note	JACK (J2)
69	See Note	JACK (J1)
70	0102700J17	ASSEMBLY, Front Shield
71	1405264Q01	INSULATOR, Flex
72	See Note	PLUG (P2)
73	See Note	PLUG (P1)
74	0105956M66	ASSEMBLY, Volume Pot Flex
75	See Note	JACK (J3)
76	0105956M68	ASSEMBLY, Frequency Flex
77	See Note	JACK (J4)
78	See Note	JACK (J5)
79	3205141Q01	GASKET, O-Ring
80	4205140Q01	CLAMP, Speaker (3 req'd)
81	See Note	SPEAKER (LS1)
82	4205136S01	RETAINER, Microphone
83	1405299L01	BOOT, Microphone; part of item 98
84	See Note	ASSEMBLY, Microphone Flex (MK1); includes item 90
85	7505564S01	PAD, Microphone Boot
86	7505501R03	PAD, Front Cover
87	0300140041	SCREW, Phillips; 2-56 x1/4" (2 req'd)
88	0105958N94	ASSEMBLY, Speaker Felt
89	See Note	PLUG (P5)
90	- - - - - - - - -	CARTRIDGE, Microphone; part of item 84
91	See Note	SWITCH (S3)
92	1405299Q01	INSULATOR, Speaker
93	7505501R02	PAD, Speaker
94	0105950N92	ASSEMBLY, Knob
95	2605494R01	SHIELD, I-F
96	2605123S01	SHIELD, PC BOARD ; Bottom
97	0200007007	NUT, Hex (for Q104 5W radios only)
98	0305103S01	SCREW, Captive
99	3905178S01	CONTACT
100	1405496R01	INSULATOR
101	0300139685	SCREW, Phillips; 2-56 x 5/32"
102	0484345A06	WASHER, Seal

NOTE: Refer to Electrical Parts List for part number and description.

Downloaded from: http://groups.yahoo.com/group/ht600e

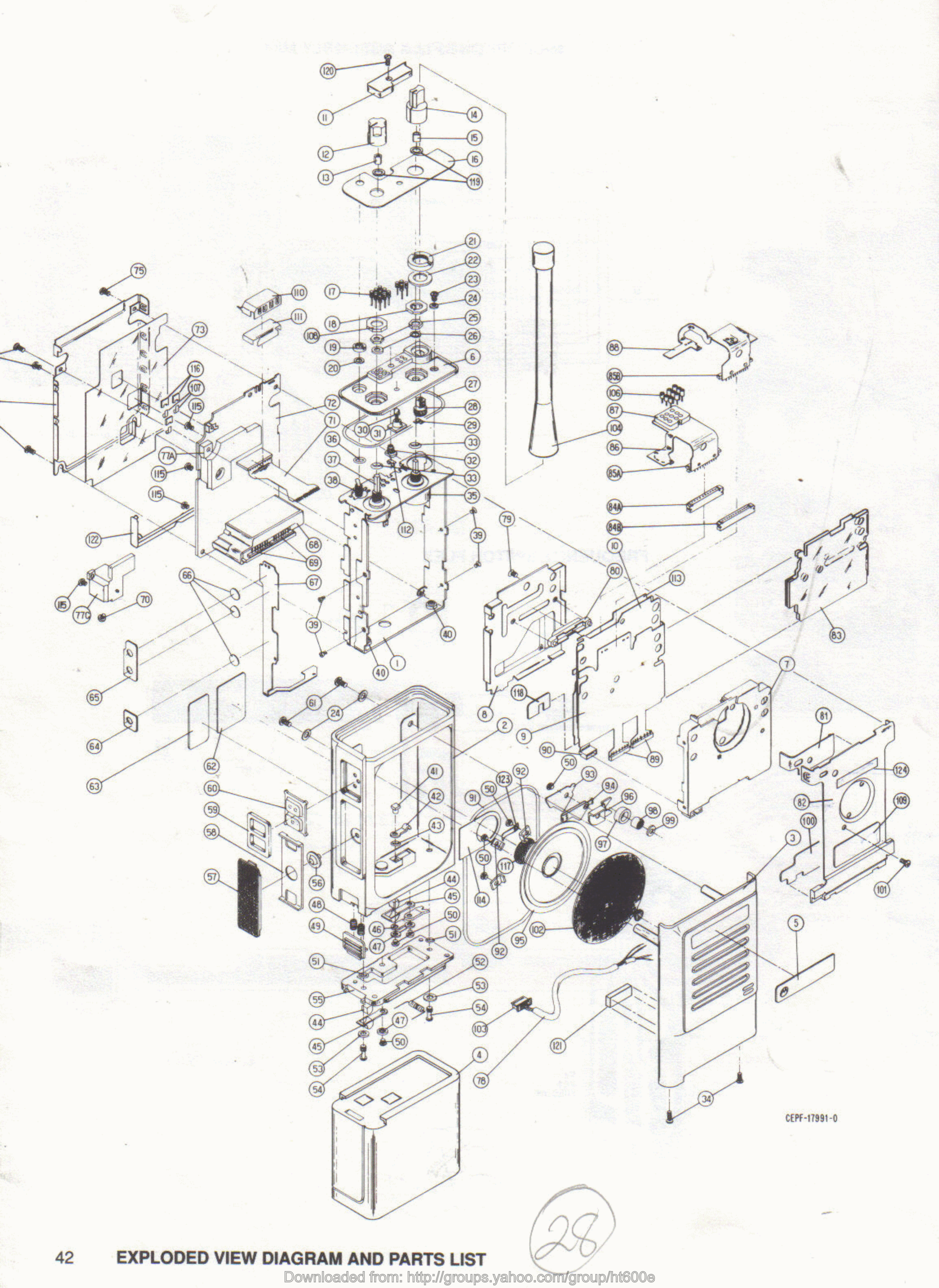

Downloaded from: http://groups.yahoo.com/group/ht600e

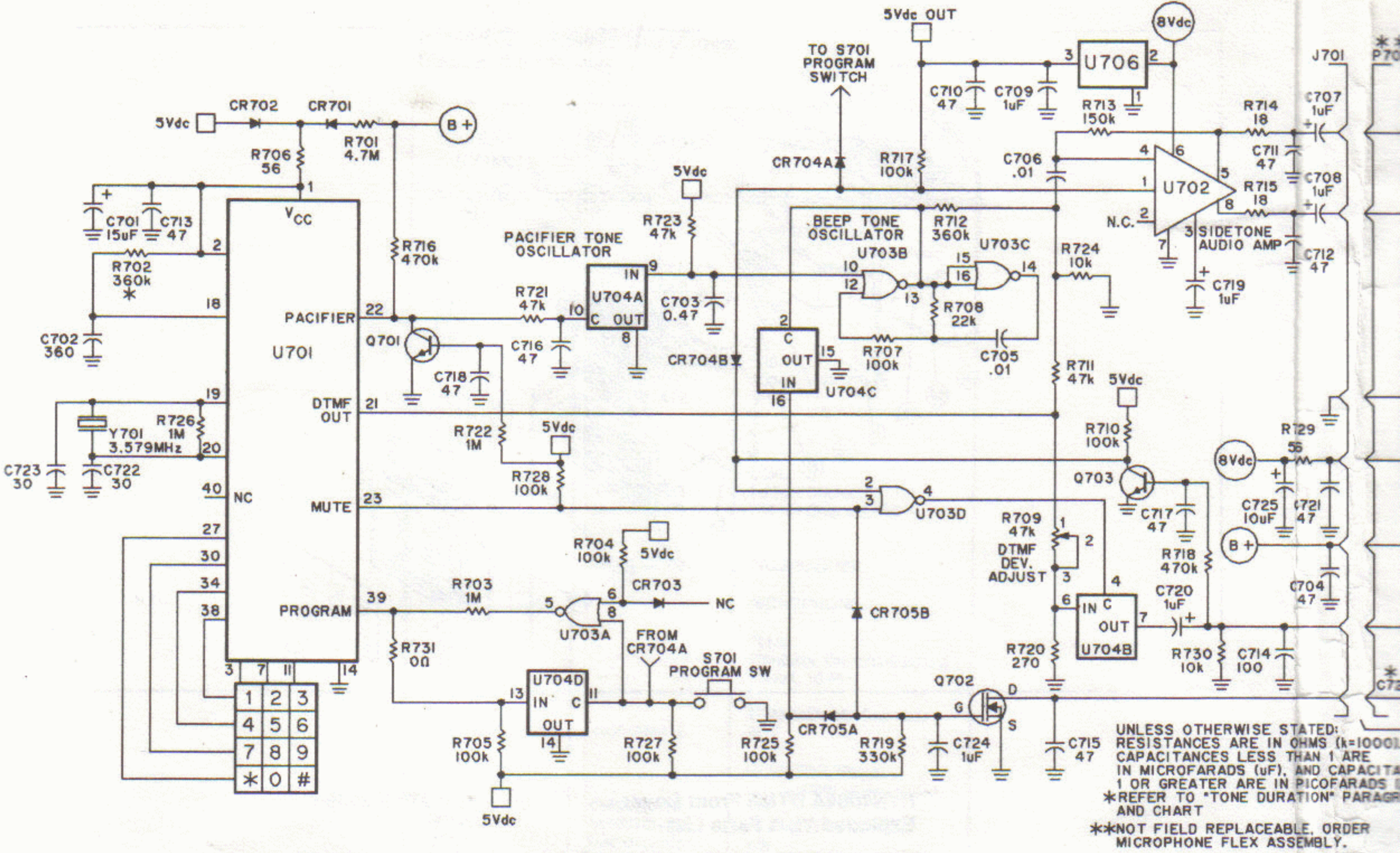

MICROPHONE FLEX ASSEMBLY MK701

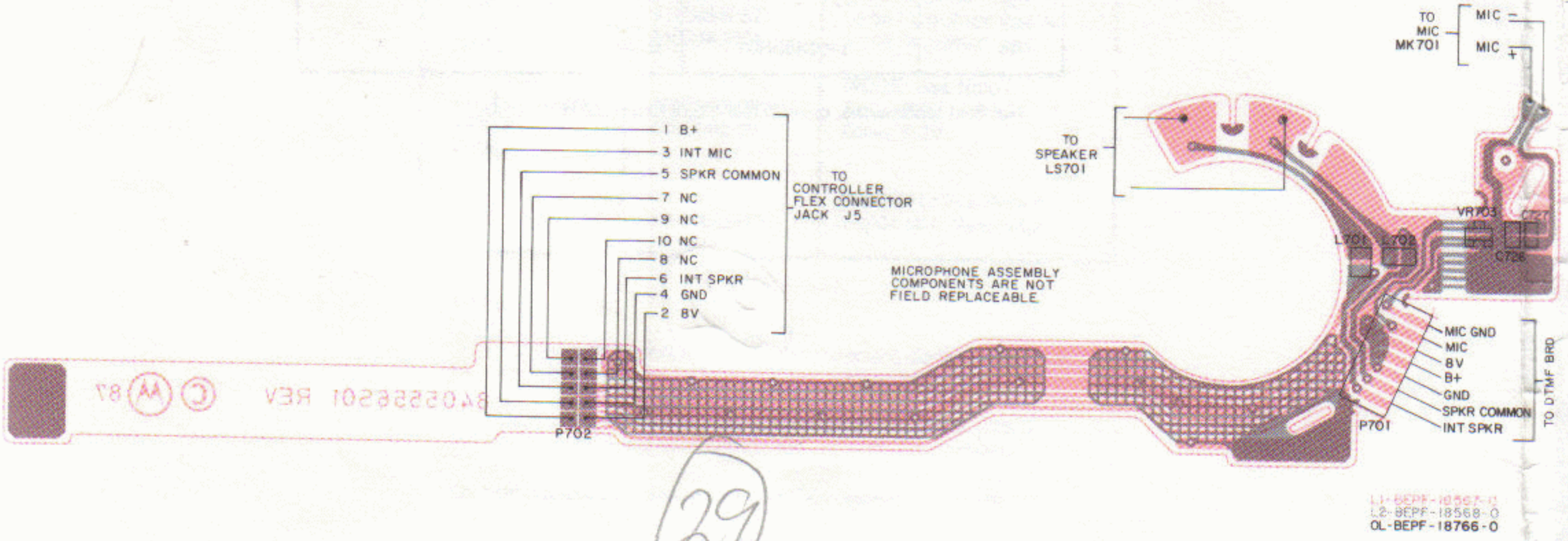

29

Downloaded from: http://groups.yahoo.com/group/ht600e

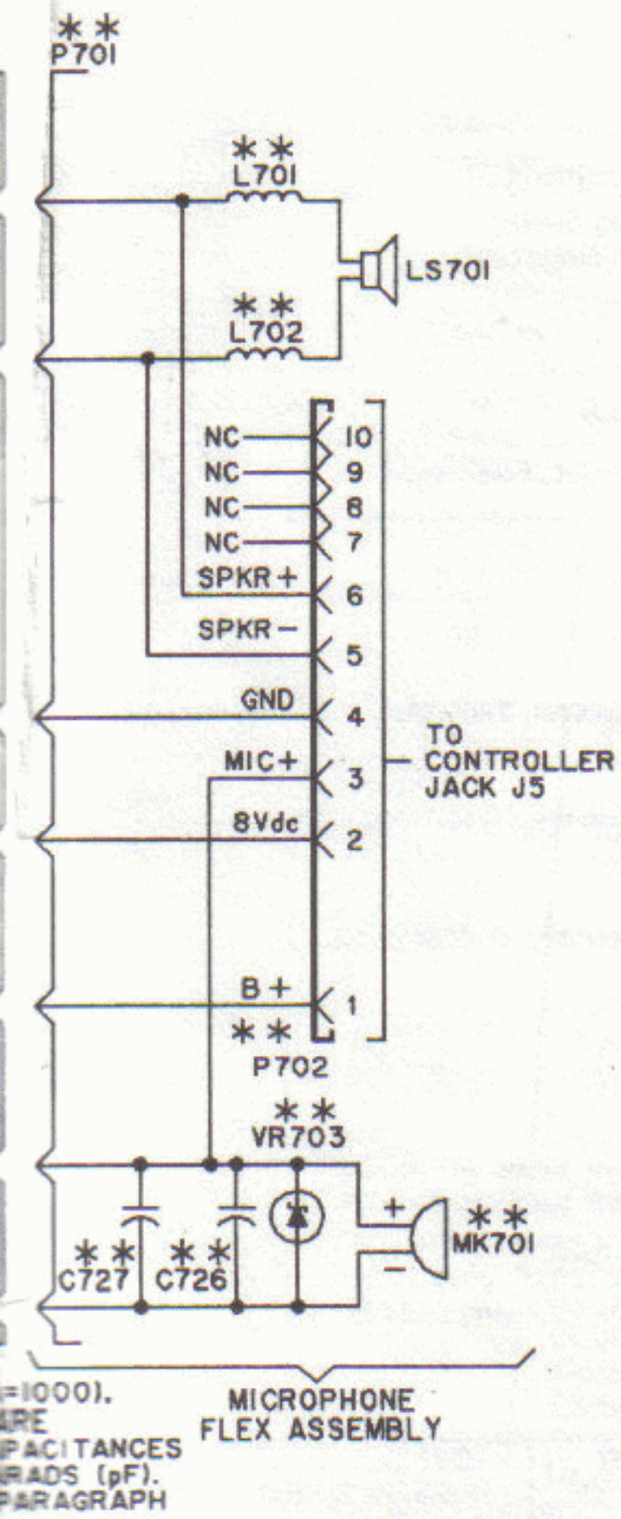

=1000).
RE
PACITANCES
RADS (pF).
PARAGRAPH

DER

63B81046C74-0

VIEWED FROM SIDE 1

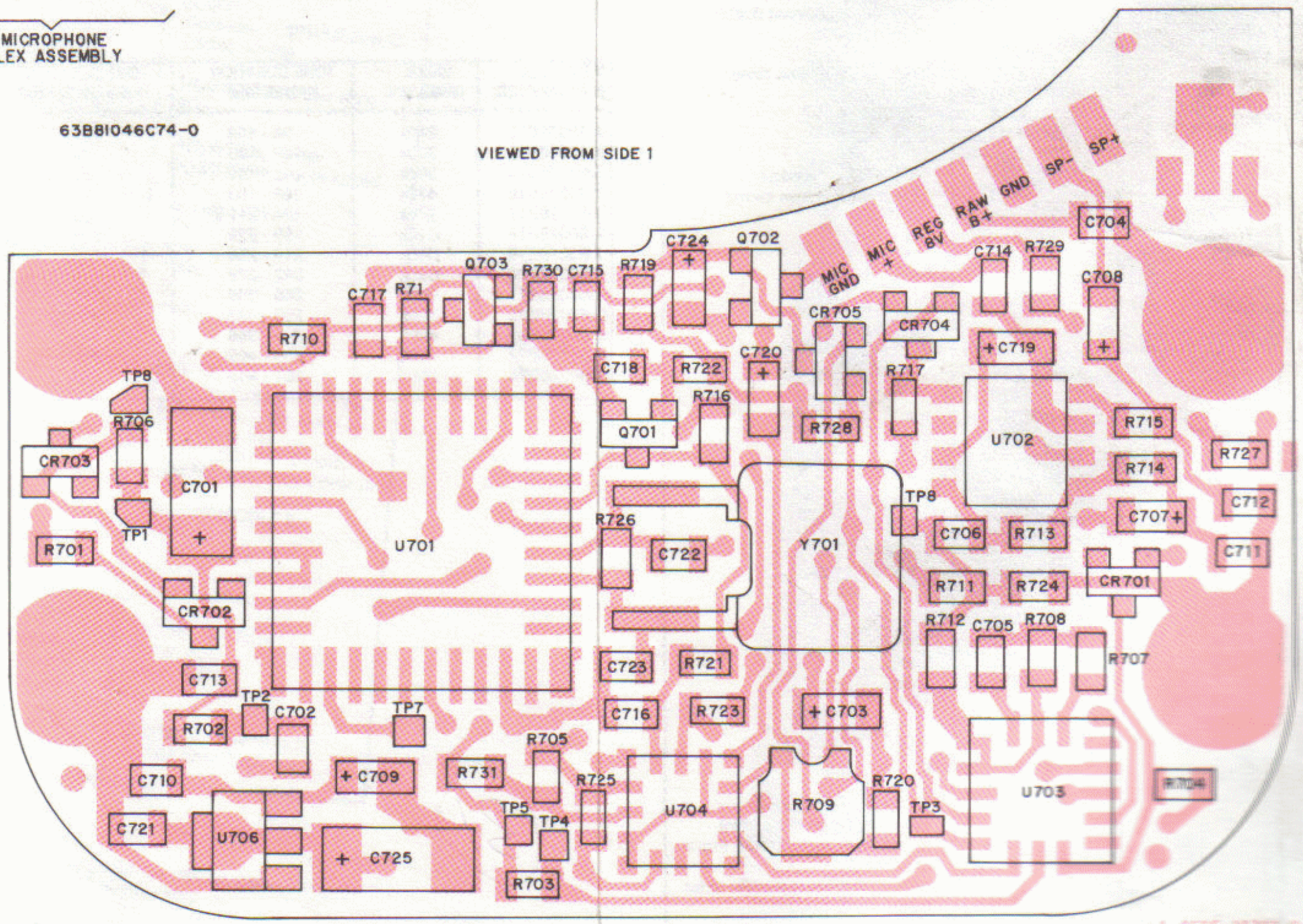

L1 CEPF-18791-0
OL CEPF-18791-0

30

DTMF CIRCUIT BOARD, FLEX ASSEMBLY, AND SCHEMATIC DIAGRAM

Downloaded from: http://groups.yahoo.com/group/ht600e

NTN4884B DTMF Front Cover **TPLF-3646-O**
Electrical Parts List

REFERENCE SYMBOL	MOTOROLA PART NO.	DESCRIPTION
		CAPACITOR, Fixed: **uF±10%; 16V** unless stated
C701	2362998C24	15;10V; Tant.
C702	2160520C14	360pF±2%;25V
C703	2362998C05	0.47;35V
C704	2160520B17	47pF±5%;50V
C705, 706	2160521C25	.01;25V
C707 thru 709	2362998C09	1
C710 thru 713	2160520B17	47pF±5%;50V
C714	2160520C01	100pF±5%
C715 thru 718	2160520B17	47pF±5%;50V
C719, 720	2362998C09	1
C721	2160520B17	47pF±5%;50V
C722, 723	2160520B12	30pF±5%;50V
C724	2362998C09	1
C725	2362998B73	10±20%
C726 **	- - - - -	
C727 **	- - - - -	
		DIODE: See Note I
CR701 thru 705	4805129M24	Switching
L701, 702 **	- - - - -	**COIL:** 0.39uH Choke
LS701	5005155Q03	**TRANSDUCER**
MK701 **	- - - - -	**MICROPHONE**
		PLUG:
P701 **	- - - - -	Contacts, flex circuit plating
P702 **	- - - - -	Socket, 10-Pin
		TRANSISTOR: See Note I
Q701	4805128M11	SOT
Q702	4805218N11	D-MOS
Q703	4805128M11	SOT
		RESISTOR, Fixed:Ω ±5%;1/10W unless stated
R701	0660076H41	4.7Meg
R702	0660076B14	360k
R703	0660076B25	1Meg
R704, 705	0660076B01	100k
R706	0660076A19	56;1/8W
R707	0660076B01	100k
R708	0660076A81	22k
R709	1860502A17	Pot., 47k
R710	0660076B01	100k
R711	0660076A89	47k
R712	0660076B14	360k
R713	0660076B05	150k
R714, 715	0660076A07	18
R716	0660076B17	470k
R717	0660076B01	100k
R718	0660076B17	470k
R719	0660076B13	330k
R720	0660076A35	270
R721	0660076A89	47k
R722	0660076B25	1Meg
R723	0660076A89	47k
R724	0660076A73	10k
R725	0660076B01	100k
R726	0660076B25	1Meg
R727, 728	0660076B01	100k
R729 **	- - - - -	
R730	0660076A73	10k
R731	0660076M01	0
		SWITCH:
S701	- - - - -	Program, Single-Pole (Not replaceable, order DTMF Front Cover Kit)
S702	- - - - -	Keypad (Not replaceable, order DTMF Front Cover Kit)
		CIRCUIT MODULE: See Note I
U701	0105953P31	Tone Generator
U702	5105469E51	Audio Amplifier
U703	0105953P32	Quad NOR Gate
U704	0105953P33	Analog Switch
U706	5160880B01	5-Volt Regulator
		DIODE: See Note I
VR703 **	- - - - -	Zener, 5.6V
		CRYSTAL: See Note II
Y701	4805719G04	3.579 MHz Resonator

NOTES:

I. For optimum performance, order replacement diodes, transistors, and circuit modules by Motorola part number only.

II. When ordering crystal units, specify carrier frequency, crystal frequency, crystal type number, and Motorola part number.

** Not field replaceable, order microphone flex assembly 0105956P38.

TONE DURATION

DTMF radios transmit timed DTMF tones. These tones are preset at the factory for 150ms. duration. To accommodate equipment with timing requirements other than 150ms., the tone duration can be changed by changing resistor R702, which is located between pins 2 and 18 of U701(lower left corner of circuit board). Refer to the following table for details.

R702

MOTOROLA PART NUMBER	VALUE OHMS ±5%	TONE DURATION RANGE (ms)	TONE DURATION NOMINAL Tn (ms)
0660076B10	240k	94 - 108	101
0660076B12	300k	117 - 135	126
0660076B14	360k	141 - 162	150
0660076B16	430k	168 - 193	180
0660076B17	470k	184 - 211	197
0660076B18	510k	199 - 229	214
0660076B19	560k	219 - 252	235
0660076B20	620k	242 - 279	260
0660076B21	680k	266 - 306	285
0660076B22	750k	293 - 337	315
0660076B23	820k	320 - 368	344
0660076B24	910k	355 - 409	382
0660076B25	1M	391 - 449	420

Downloaded from: http://groups.yahoo.com/group/ht600e

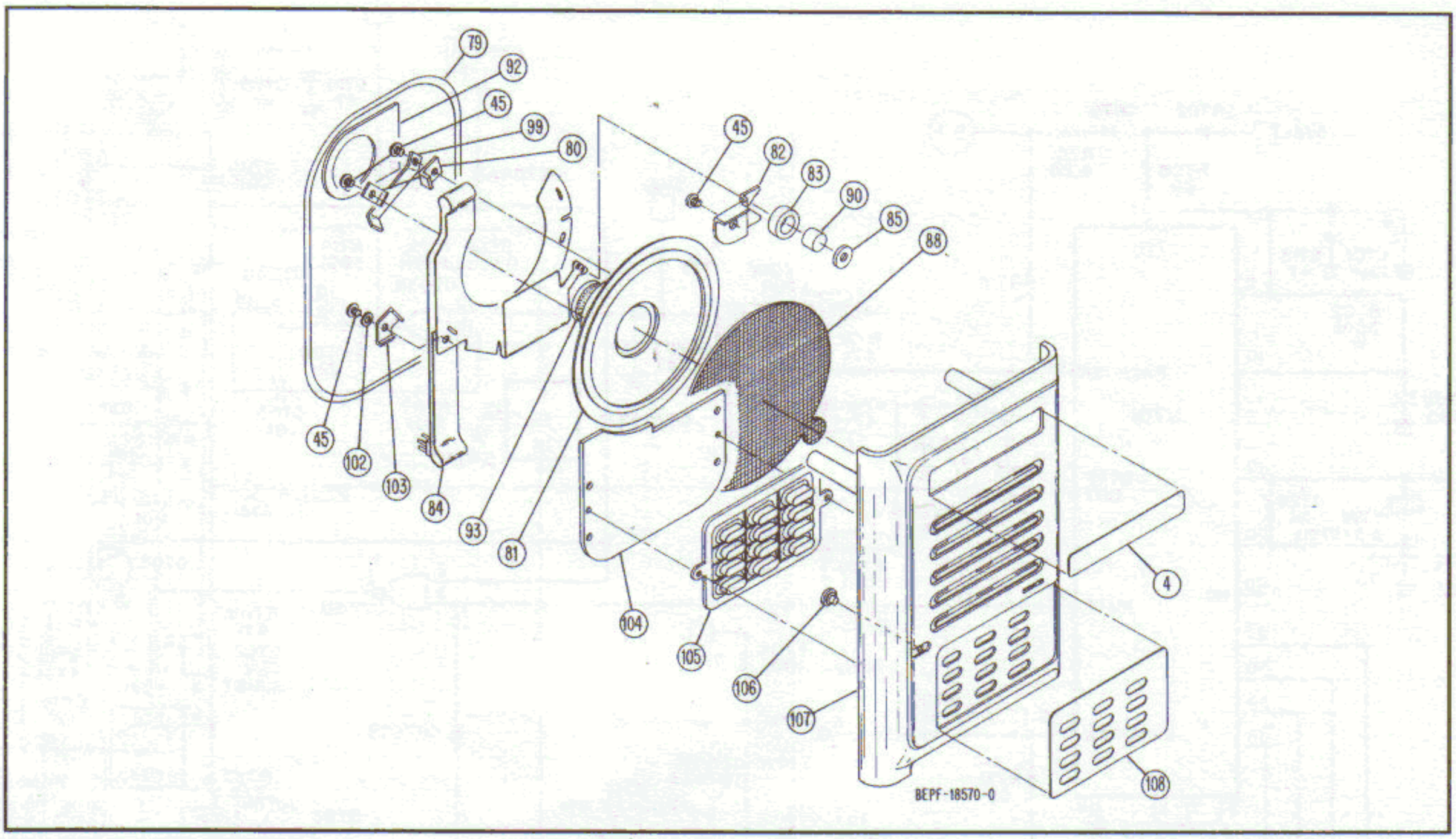

NTN4884A DTMF Front Cover Exploded View Parts List **TPLF-3589-O**

ITEM NO.	MOTOROLA PART NO.	DESCRIPTION
Note: Motorola part number and description of DTMF Exploded View items (ITEM NO.s 4 to 83, 85, 88, 90, 93, and 99) correspond to those of the standard radio Exploded View and Exploded View Parts List. The following items are unique to DTMF Front Cover.		
84	0105956P38	ASSEMBLY, DTMF Microphone Flex
102	0484345A06	WASHER,Seal
103	0705456R01	BRACKET, Speaker
104	- - - - -	* CIRCUIT BOARD, DTMF
105	- - - - -	* SWITCH, Keypad
106	- - - - -	* SWITCH, Actuator
107	- - - - -	* COVER, Front
108	1305455R01	ESCUTCHEON, DTMF

* Not field replaceable, order DTMF Front Cover Kit NTN4884A.

32

Downloaded from: http://groups.yahoo.com/group/ht600e

UNLESS OTHERWISE STATED:
RESISTANCES ARE IN OHMS (k=1000),
CAPACITANCES LESS THAN 1 ARE
IN MICROFARADS (uF), AND CAPACITANCES
1 OR GREATER ARE IN PICOFARADS (pF).

* NOT FIELD REPLACEABLE. ORDER
MICROPHONE FLEX ASSEMBLY.

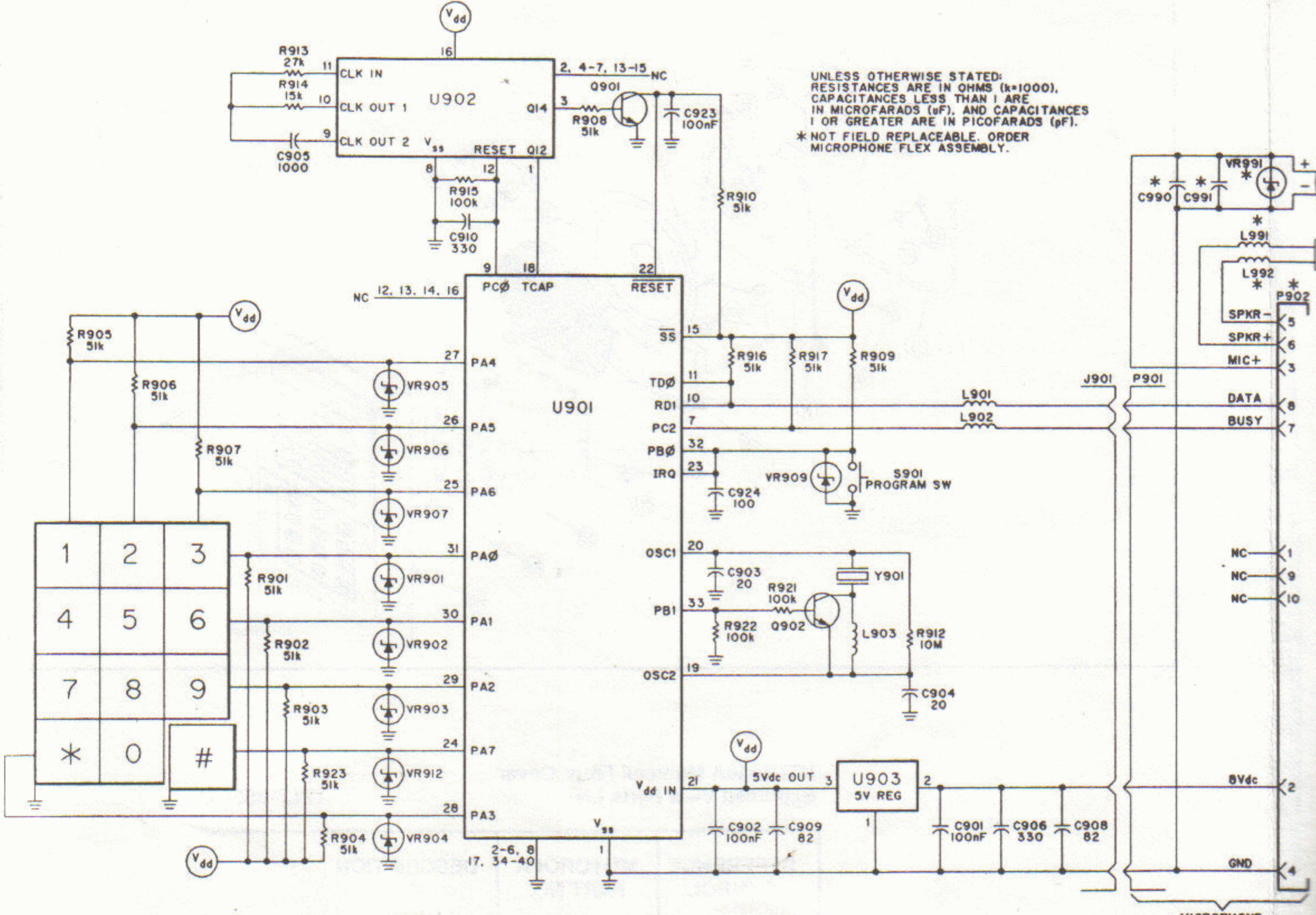

MICROPHONE FLEX ASSEMBLY MK901

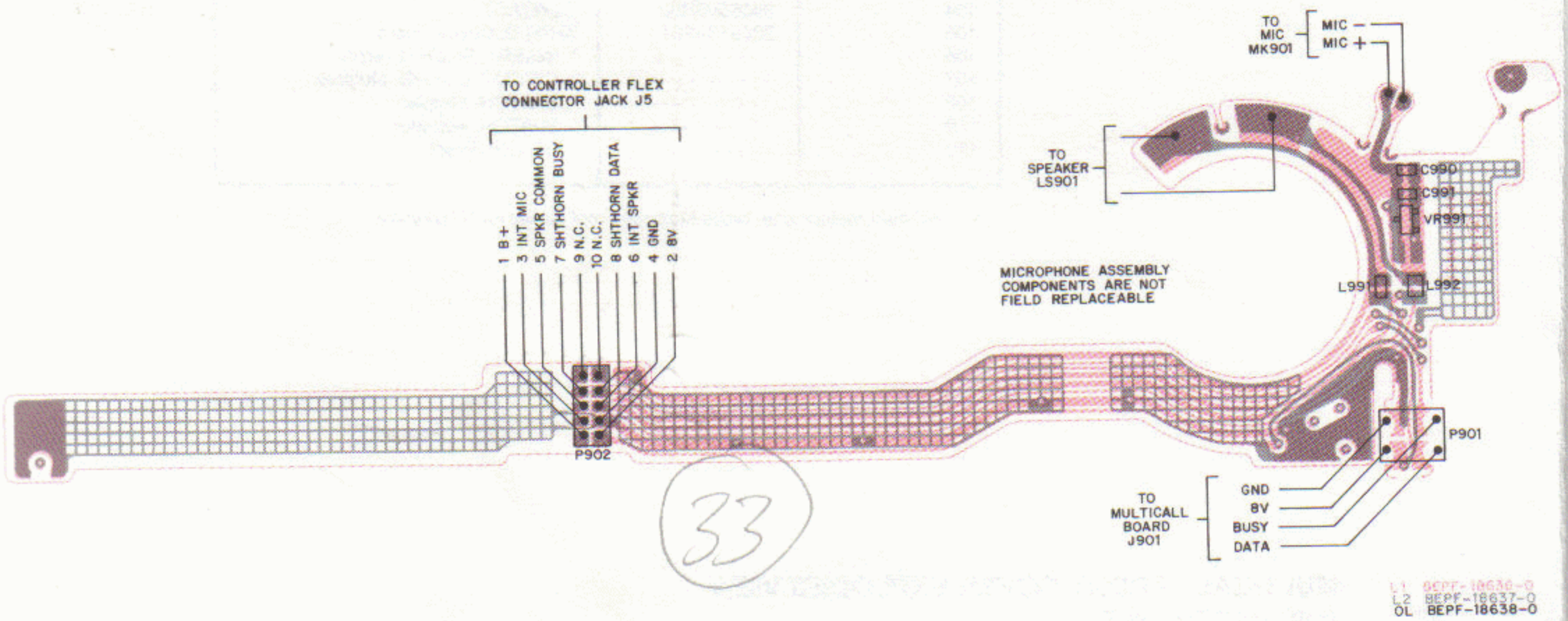

33

Downloaded from: http://groups.yahoo.com/group/ht600e

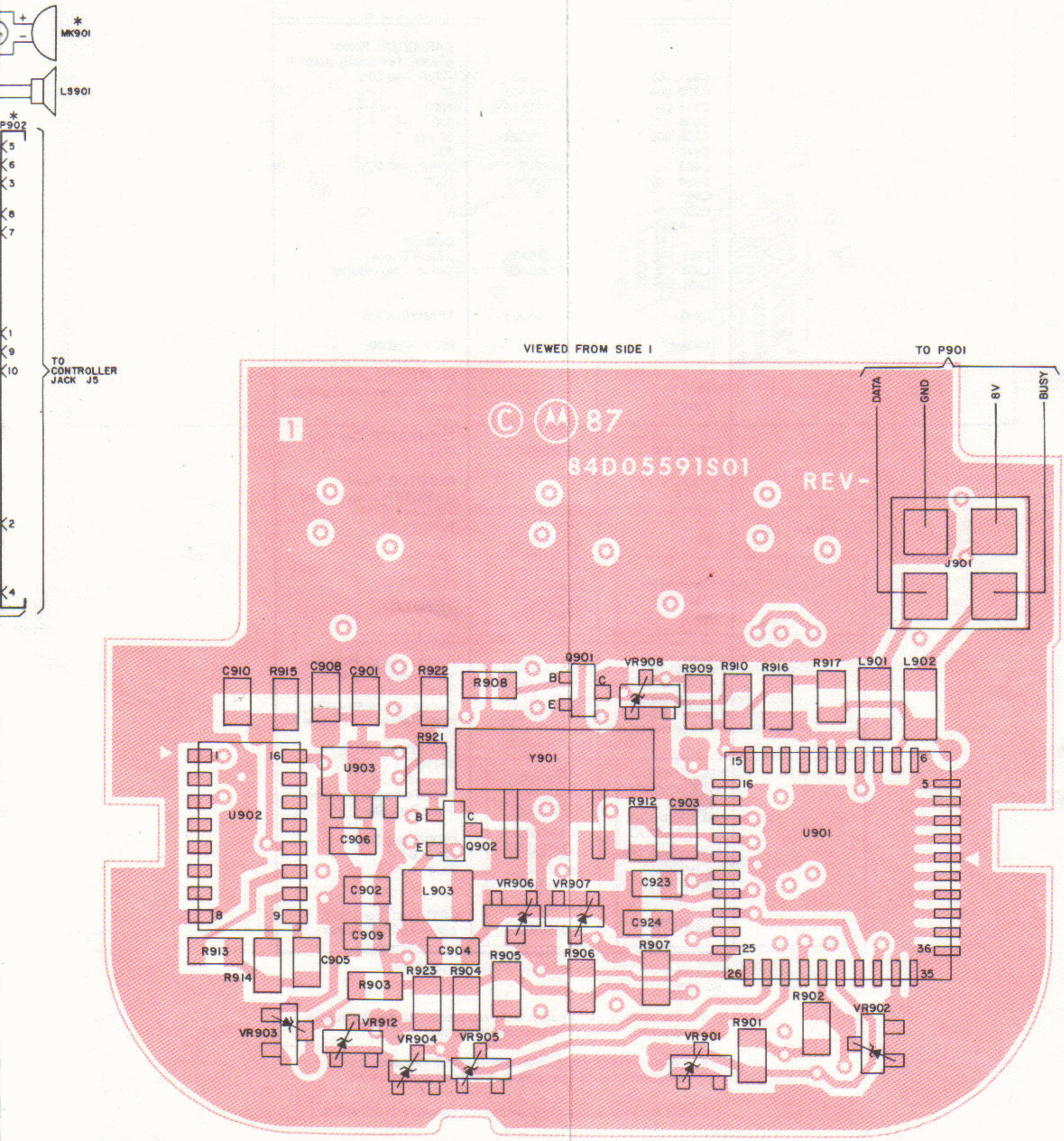

34

MULTICALL CIRCUIT BOARD, FLEX ASSEMBLY, AND SCHEMATIC DIAGRAM

Downloaded from: http://groups.yahoo.com/group/ht600e

NTN4958A Multicall Front Cover
Electrical Parts List **TPLF- 3600 - O**

REFERENCE SYMBOL	MOTOROLA PART NO.	DESCRIPTION
		CAPACITOR, Fixed: **pF±5%; 16V** unless stated
C901, 902	2160521G37	100nF; +80-20%
C903, 904	2160520B08	20
C905	2160521A13	1000
C906	2160520C13	330
C908, 909	2160520B23	82
C910	2160520C13	330
C923	2160521G37	100nF; +80-20%
C924	2160521A13	1000
C991 *	----------	
C992 *	----------	
		COIL:
L901, 902	2462575A03	0.82uH Choke
L903	2460590A03	180 uH Chip Inductor
L991, 992 *	----------	
LS901	5005155Q03	**TRANSDUCER**
MK901 *	----------	**MICROPHONE**
		PLUG:
P901 *	----------	Contacts, flex circuit plating
P902 *	----------	Socket, 10-Pin
		TRANSISTOR: See Note I
Q901, 902	4805128M12	SOT
		RESISTOR, Fixed: **Ω ±5%;1/8W** unless stated
R901 thru 910	0660076A90	51k
R912	0660076H49	10 Meg ±10%
R913	0660076A83	27k
R914	0660076A77	15k
R915	0660076B01	100k
R916, 917	0660076A90	51k
R921, 922	0660076B01	100k
R923	0660076A90	51k
		SWITCH:
S901	----------	Program, Single-Pole (Not replaceable, order Multicall Front Cover Kit)
S902	----------	Keypad (Not replaceable, order Multicall Front Cover Kit)
		CIRCUIT MODULE: See Note I
U901	0105805P23	Microcomputer
U902	5105469E52	14-bit Frequency Counter
U903	5160880B01	5-Volt Regulator
		DIODE: See Note I
VR901 thru 908	4880140L09	Zener, 6.2V
VR912	4880140L09	Zener, 6.2V
VR991 *	----------	
		CRYSTAL: See Note II
Y901	4805664G33	3.6864 MHz Resonator

NOTES:

I. For optimum performance, order replacement diodes, transistors, and circuit modules by Motorola part number only.

II. When ordering crystal units, specify carrier frequency, crystal frequency, crystal type number, and Motorola part number.

* Not field replaceable, order microphone flex assembly 0105956P58.

Downloaded from: http://groups.yahoo.com/group/ht600e

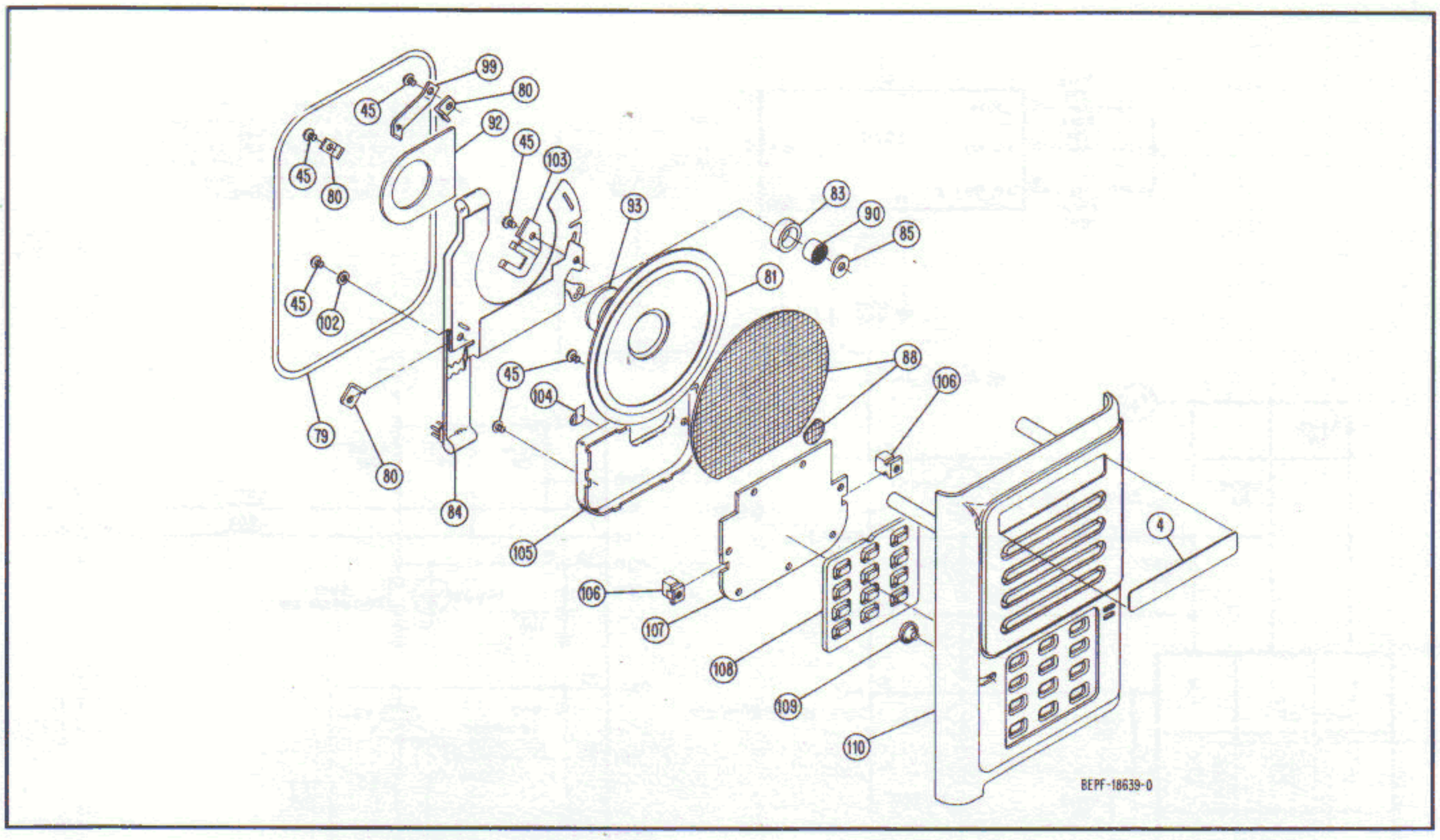

NTN4958A Multicall Front Cover
Exploded View Parts List **TPLF-3601-O**

REFERENCE SYMBOL	MOTOROLA PART NO.	DESCRIPTION
Note:	**Motorola part number and description of Multicall Exploded View items (ITEM NO.s 4 to 83, 85, 90, 92, 93, 99, and 102) correspond to those of the standard radio Exploded View and Exploded View Parts List. The following items are unique to Multicall Front Cover.**	
84	0105956P58	ASSEMBLY, Multicall Microphone Flex
88	3505152J01	FELT, Speaker
103	4205167S01	RETAINER, Microphone
104	3905509R02	CONTACT
105	2605164S01	SHIELD, Circuit Board
106	- - - - - - - - - -	* INSERT, Shield (2 req'd)
107	- - - - - - - - - -	* CIRCUIT BOARD, Multicall
108	- - - - - - - - - -	* SWITCH, Keypad
109	- - - - - - - - - -	* SWITCH, Actuator
110	- - - - - - - - - -	* COVER, Front

* Not field replaceable, order Multicall Front Cover Kit NTN4958A.

36

Downloaded from: http://groups.yahoo.com/group/ht600e

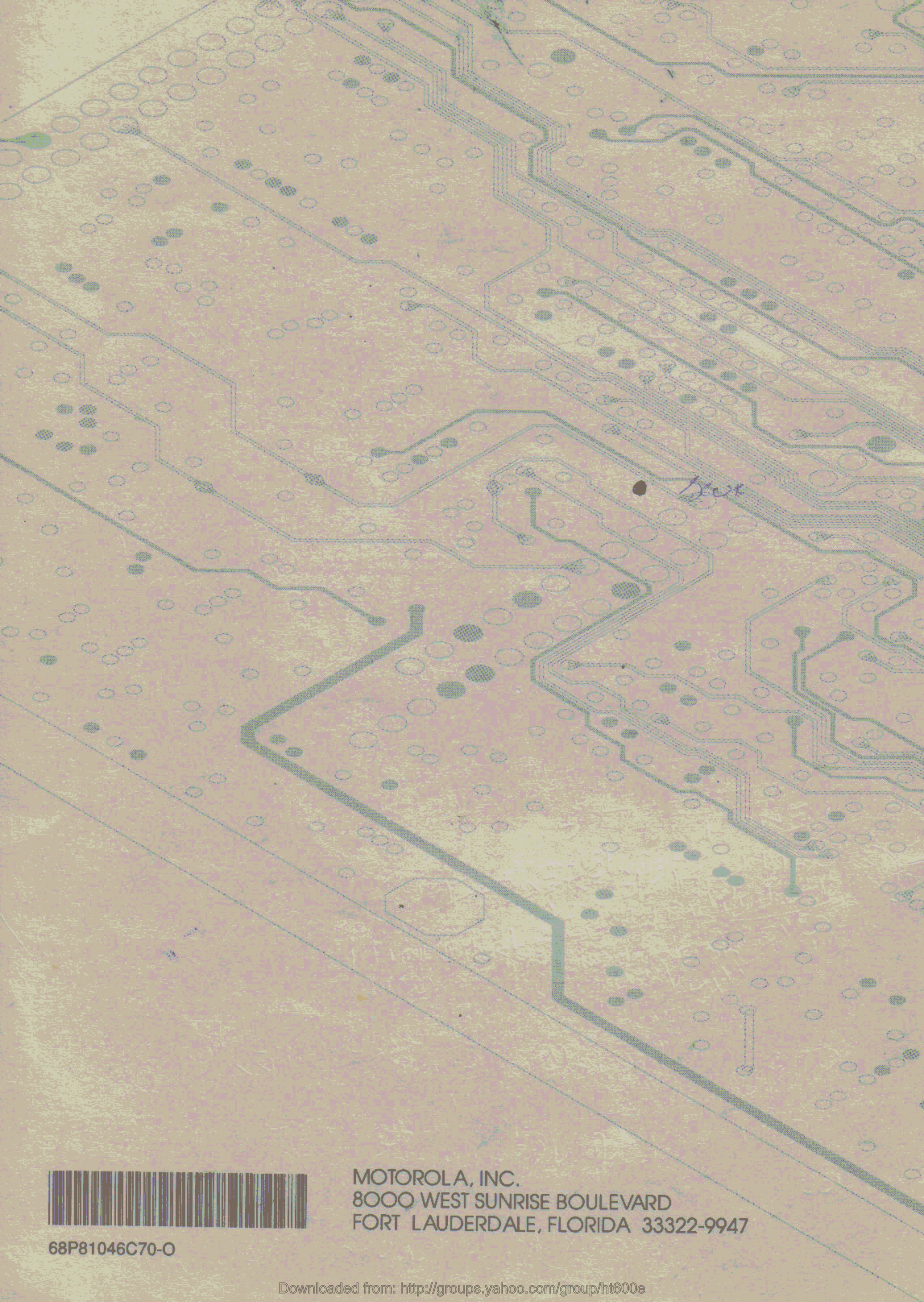

MOTOROLA, INC.
8000 WEST SUNRISE BOULEVARD
FORT LAUDERDALE, FLORIDA 33322-9947

68P81046C70-O

Downloaded from: http://groups.yahoo.com/group/ht600e