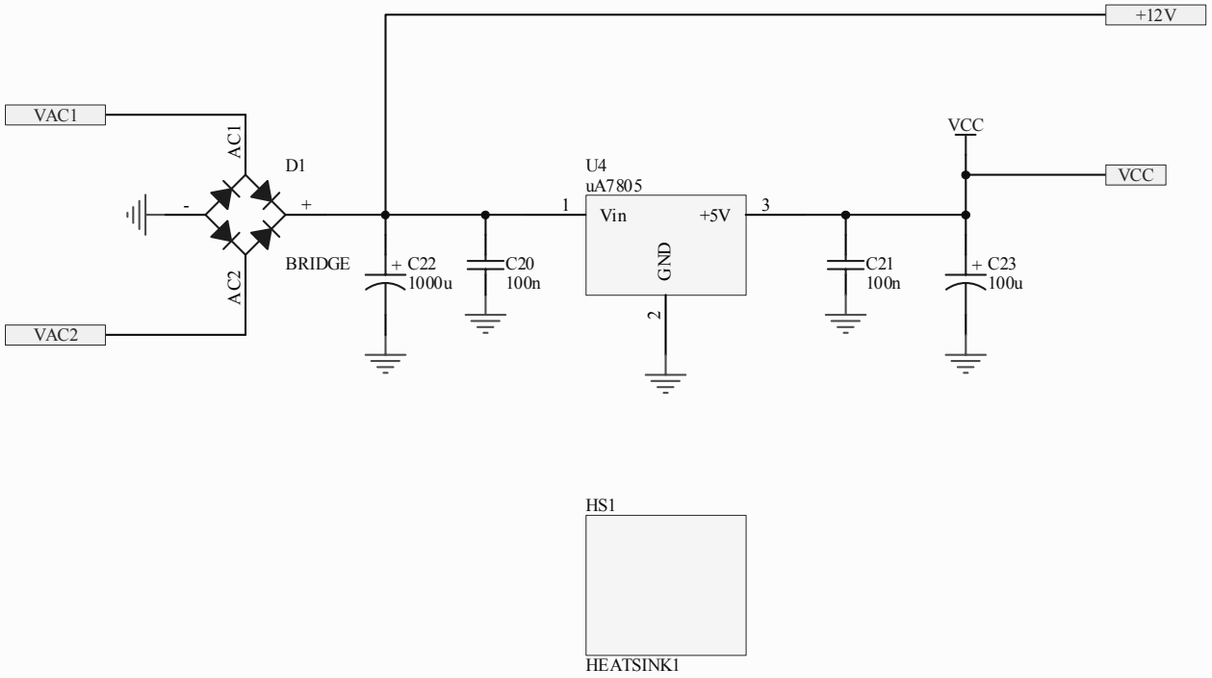

Title		
Size A	Number	Revision
Date: 10/10/2005	Sheet of	
File: C:\Documents and Settings\...\pwr5v_v4.sch	Drawn By:	