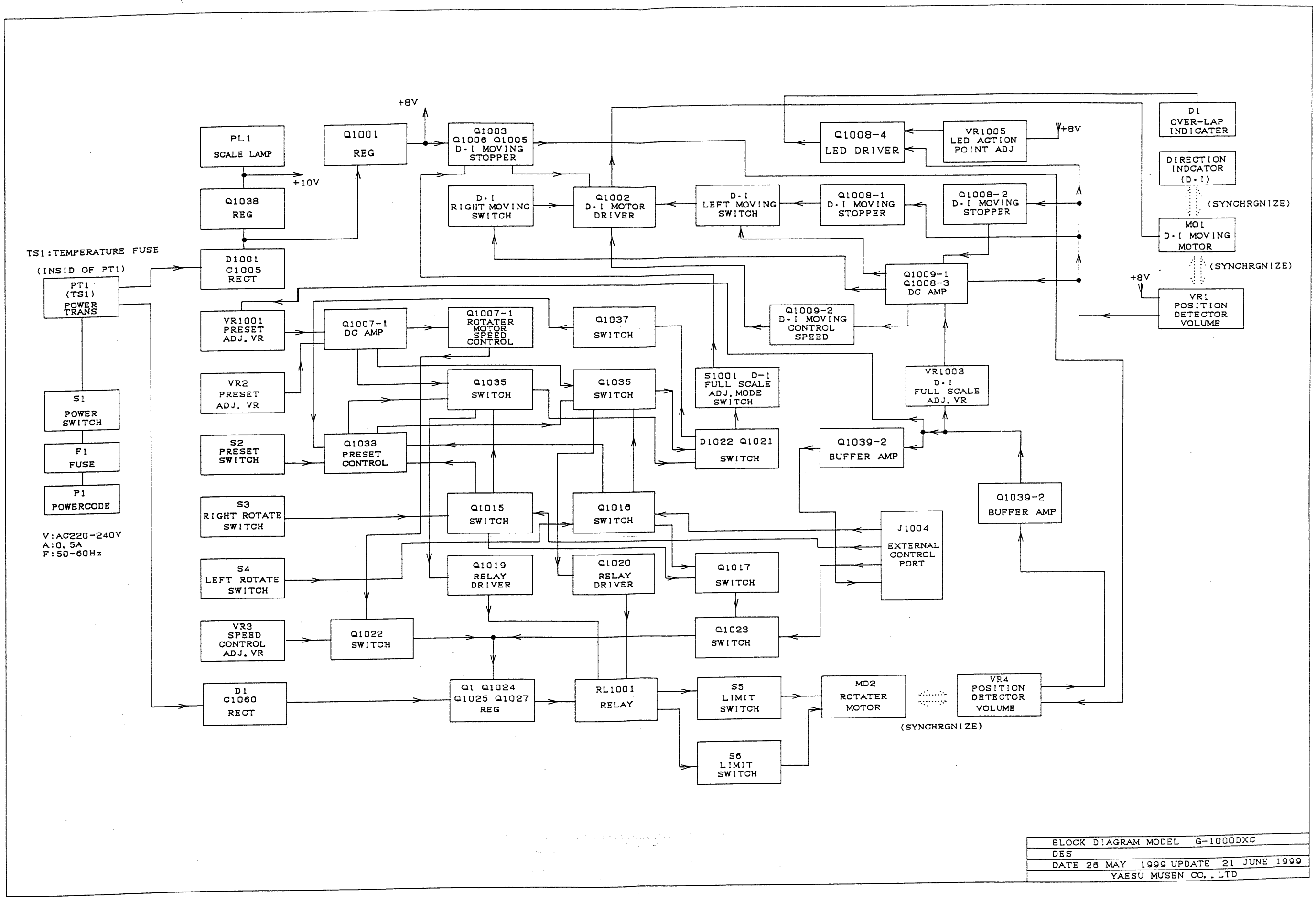

BLOCK DIAGRAM MODEL	G-1000DXC
DES	
DATE 26 MAY 1999 UPDATE	21 JUNE 1999
YAESU MUSEN CO., LTD	